Pitched roof coverings series

1. Where is it all going wrong?	**2. Wet mortar work essentials**	3. Weathering details & fixing

This is the second session of a three session series on pitched roof coverings. The series provides a practical approach to raising the standards of pitched roof coverings on-site.

This session provides guidance on wet mortar work essentials.

Key learning points are identified with this symbol.

for Site Managers

Acknowledgements

NHBC would like to acknowledge and thank the following for their input and support associated with this e-learning session:

- ✓ The National Federation of Roofing Contractors Limited
- ✓ Forticrete
- ✓ Marley Eternit
- ✓ Redland
- ✓ Sandtoft

This e-learning session takes a non product specific, general approach for the following reason, manufacturer's may have their own very specific specification or fixing requirements.
Therefore please make use of the manufacturer's technical product support relevant to the products used on your site.

NHBC would like to thank The Crowood Press Ltd for giving permission to use their images in this learning series. These images are from the book:

Taylor, K., 2009. Roof Tiling and Slating a practical guide
Marlborough: The Crowood Press Ltd.

Aims of this e-learning series

After each individual e-learning session you should:

Session 1

Where is it all going wrong?

- ✓ Know the extent of pitched roof claims
- ✓ Be clear where to focus your attention as a supervisor

This session

Wet mortar work essentials

- ✓ Understand the correct use of mortar on roofs
- ✓ Appreciate the benefits of adopting a team approach on site
- ✓ Be aware of alternative solutions

Session 3

Weathering details & fixing

- ✓ Have a good understanding of typical roof weathering details
- ✓ Appreciate the importance of correct fixing

Adopting a team approach can be beneficial for all

A practical approach to wet mortar work essentials

Key areas of focus:

- ✓ Mortar
- ✓ Wet mortar work
- ✓ Setting out at wet verges/valleys
- ✓ Alternative solutions

Clear benefits to be gained from:

- ✓ Good design and specification
- ✓ Effective co-ordination of the trades
- ✓ Informed supervision

Mortar work essentials:

- ✓ Ensure that the correct mix is used
- ✓ The mortar bed be must be compressed
- ✓ Excessively large mortar beds/joints will increase the potential for shrinkage
- ✓ Mortar bedding and pointing, should be completed in one operation
  (i.e. the mortar must act as one material and not two layers)

Mortar mix

Following meetings with NFRC, research was undertaken jointly, to establish the suitability of some alternative proven mortar mixes for roofing applications.

The outcome of this research is that NHBC has up-dated the mortar mix for roofing. This is reflected in the revised Chapter 7.2 and is as follows:

Roofing mortar should be 1:3 cement:sand with plasticiser. The mix should be based on sharp sand with soft sand added to achieve workability.
The proportion of sharp sand should not be less than ⅓ of the total sand content.

Alternatively proprietary roofing mortar mixes may be accepted by NHBC if they are shown to have similar strength, durability and workability.

Adapted silo or retarded tub mortars are no longer acceptable.

Fascia board height

1. Under eaves tiles for the first course. This is how the tiles should lay when the under eaves tiles are being supported by the fascia board at the correct height.

2. Fascia board too high eaves tiles now below minimum pitch.

3. Fascia board too low causing the eaves tiles to drop.

4. Trade co-ordination is required to set the facia board at the correct height.

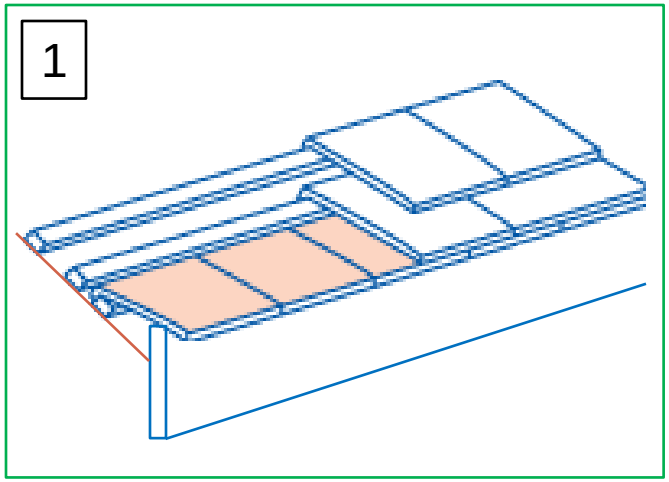

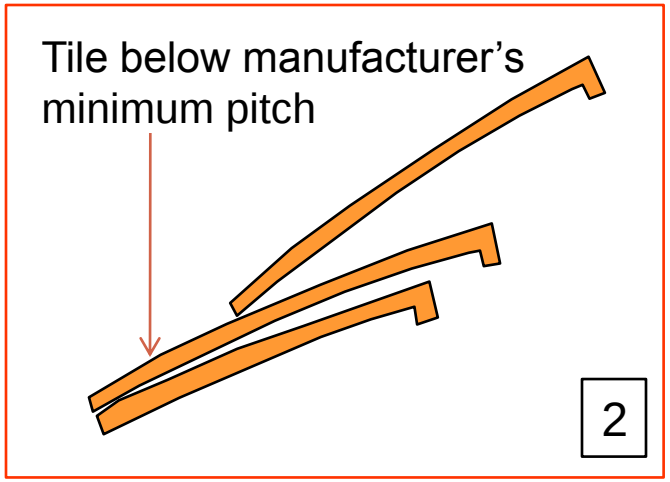

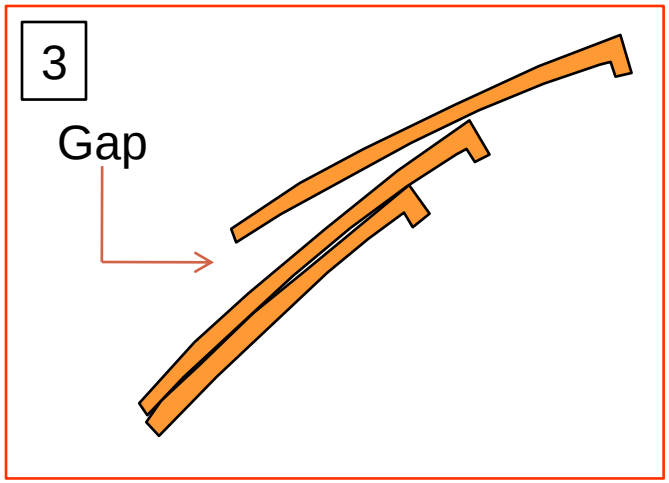

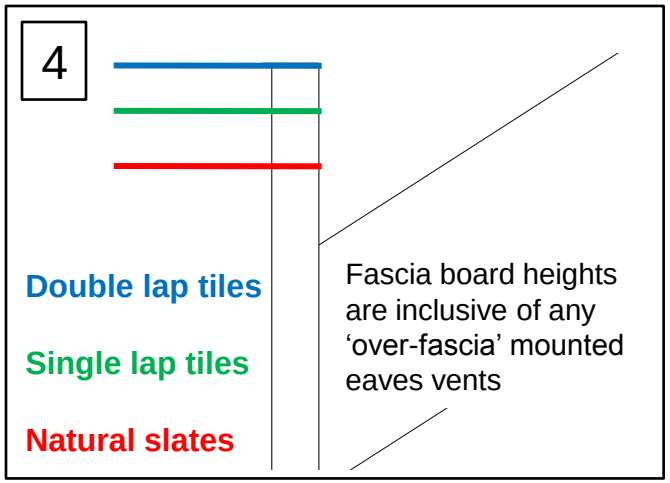

The fascia board height is dependant upon the following factors; roof pitch and the type of roof covering.

Hip irons

Where wet bedded tiles are used at hips, they should be supported at the base of the hip by a galvanized hip iron and project to the centre line of the gutter.

At the eaves of the roof it is particularly important to co-ordinate the trades when considering the following:

- eaves course projection into the gutter
- fascia board height
- hip iron projection
- underlay projection into the gutter
- underlay support

Image from the publication; Roof tiling and slating by Kevin Taylor

Underlay support at eaves

1. Missing tilting fillet causing ponding (bad practice).
The underlay should be supported by a continuous fillet or proprietary eaves support tray.

2. Tilting fillet fitted flush with the top of the fascia board and fully supporting the underlay. (good practice)

3. A modern proprietary underlay support tray.

4. A fully supported underlay with no risk of ponding.

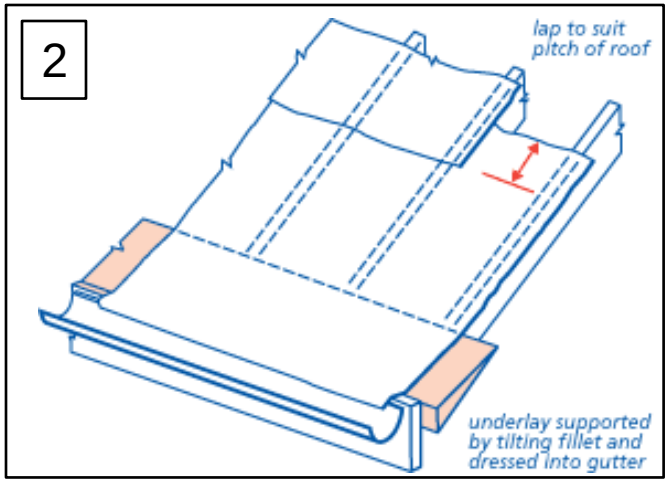

Establish at an early stage, who is responsible for supply and the fixing of the tilting fillet or proprietary eaves support tray.

Image 3 from the publication; Roof tiling and slating by Kevin Taylor

Wet mortar work – ridges & hips

Where ridge and hip tiles are bedded on mortar they should be mechanically fixed with self sealing non-ferrous fixings into timber battens.
Where proprietary systems are used they should be fixed in accordance with manufacturer's recommendations

Mortar bedding and pointing should be completed in one operation and achieve a nominal joint thickness of 10mm. To prevent shrinkage of large mortar joints, concealed or decorative dentil tiles should be fully bedded into all joints in excess of 25mm thick,

It may also be prudent to check whether operatives are familiar with the fixing system.

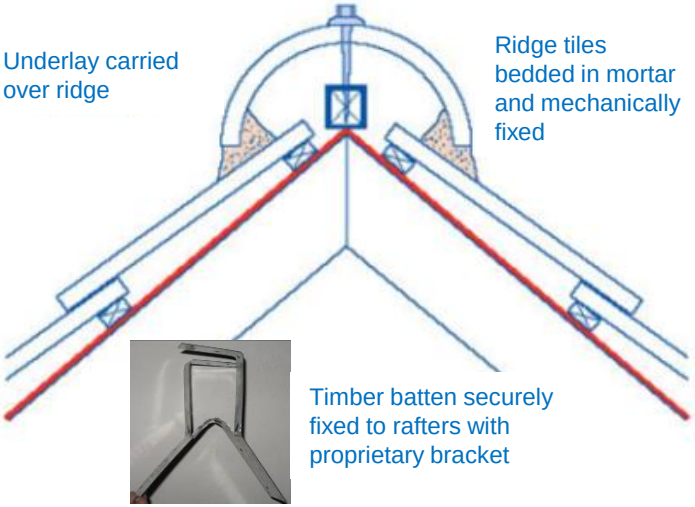

Good craftsmanship guidance - wet ridge mortar work

1. The mortar needs to be firm enough to support the ridge tile but workable enough to create good adhesion.

2. Tiles should be bedded and laid with full consistent mortar beds and joints.

3. The beds require pointing once the mortar has started to stiffen slightly.

4. The joints require pointing once the mortar has started to stiffen slightly.

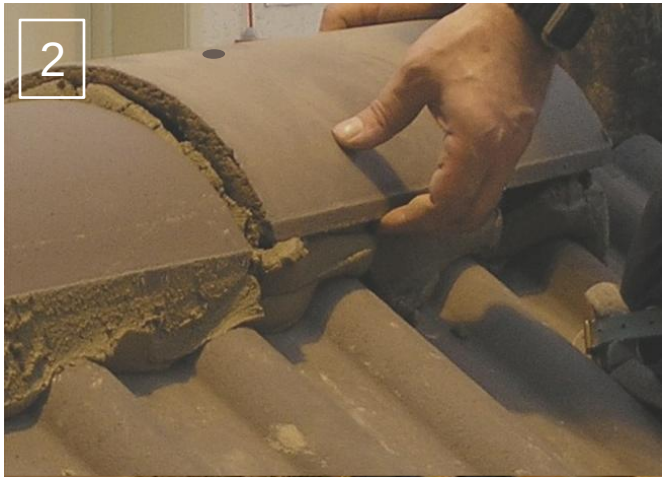

It is important to be consistent with bed depths and joint widths. Aim to achieve approximately 10mm of clearance from the roof tiles with bedding, and joint widths of 10mm or less.

Images from the publication; Roof tiling and slating by Kevin Taylor

Good craftsmanship guidance - wet hip mortar work

1. The hip iron must allow the hip tile to project to the centre line of the gutter.

2. The hip tiles must compress the mortar, be tapped into position and excess mortar removed.

3. Hip tiles must be laid ensuring full consistent bed depths and joint widths.

4. Good alignment can be achieved with a timber straight edge.

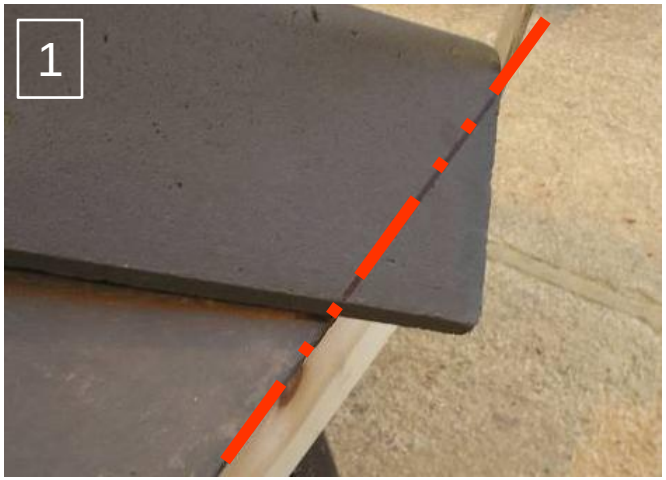

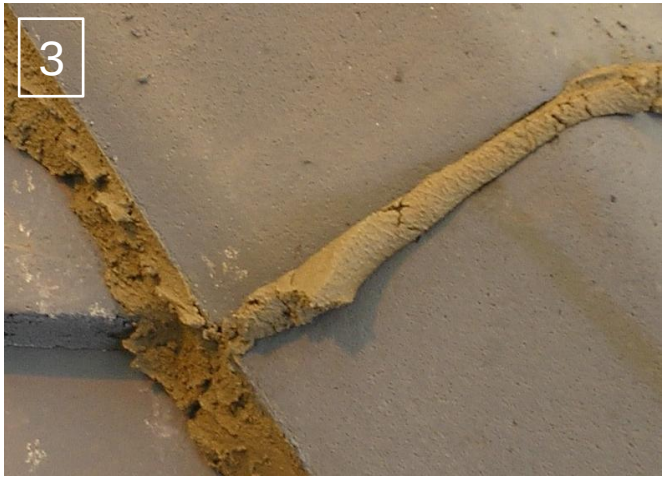

The use of the proposed gutter brackets for setting out and finding the centre line of the gutter is a reliable method.

Images from the publication; Roof tiling and slating by Kevin Taylor

Wet mortar work - verges\verge undercloak

Verges are a common feature of pitched roof claims. Verges should be bedded and pointed in one operation so that mortar acts as one material and not two layers.

Failure to do this can lead to problems. Access to repair may not be straightforward, some repairs require a complicated and hence expensive scaffolding arrangement to gain access.

So the message is simple: where mortar is used, ensure the mix is correct, the mortar bed is compressed and that the bedding and finishing is completed in one operation.

Consider moving to dry systems if possible. If you traditionally use mortar, when was the last time you considered the latest dry systems available?

The practice of not bedding verge tiles, or bedding and 'facing up' with mortar at a later date is considered to be the cause of the majority of wet verge failures.

Wet mortar work - bedding and setting back

Both images show verge mortar bedding that was carried out during the previous day.

There is a common misconception that bedding and leaving a minimum 25mm set back to allow pointing at a later date is acceptable to NHBC.

Please be reminded that this practice is <u>not acceptable</u> to NHBC.

Wet mortar work - verge undercloak

All verge tiles and slates should be bedded on an undercloak. Alternatively, proprietary dry verge systems should be fixed in accordance with manufacturers' recommendations.

The undercloak should be installed at the correct level to ensure that the line of the tiling is maintained where it passes over the wall.

Where slates or plain tiles are used the verge should project 38mm to 50mm beyond the gable wall or bargeboard.

Interlocking tiles can project 30mm to 60mm.

Wet undercloak verge - attention to detail

1. The rafter line is important, the brickwork should finish approximately 10mm below this line to allow the verge to be bedded on mortar/bedding sealant and also ensures that the battens hold down the undercloak.

2. The verge tiles should be bedded on a 100mm wide mortar bed.

3. Battens should have un-cut ends or treated ends. The battens should finish 25mm to 50mm back from the undercloak face.

4. Where slates or plain tiles are used the verge should project 38mm to 50mm beyond the gable wall or bargeboard. Interlocking tiles can project 30mm to 60mm.

5. The underlay must be taken over the cavity wall and finished as shown.

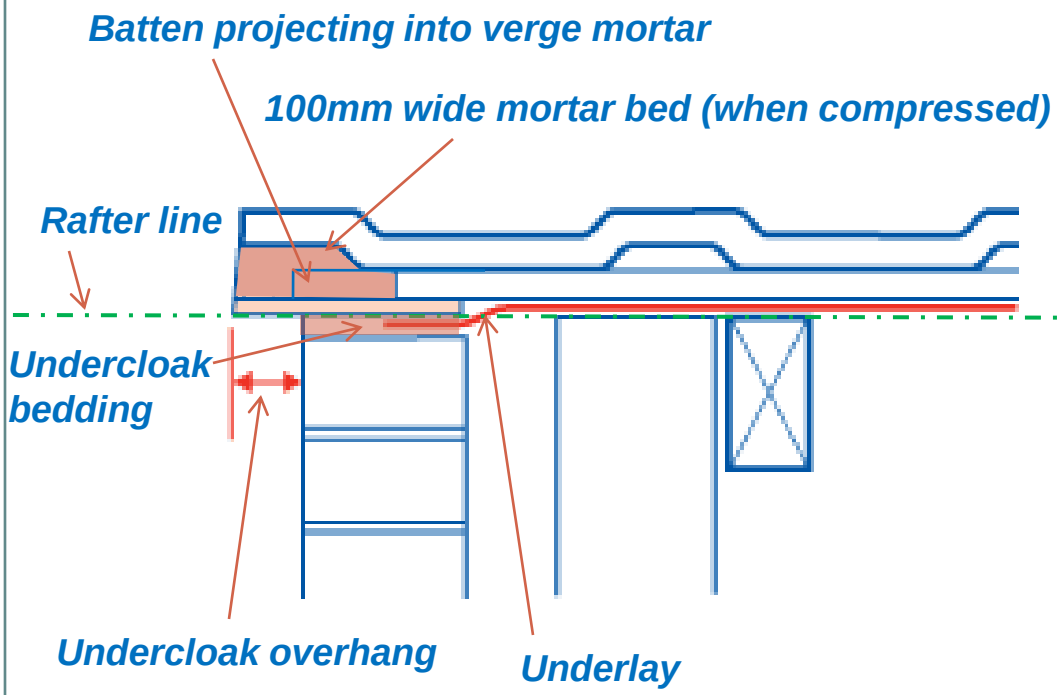

Verge detail for timber frame

A suitable timber frame verge detail is shown in the diagrams on the right hand side. This detail can accommodate differential movement.

Allowance for differential movement		
Storeys	Solid joists	Engineered joists
1	25mm	20mm
2	40mm	30mm
3	50mm	40mm
3+	Calculations req	Calculations req

The verge detail below is <u>not suitable</u> for timber frame construction and will fail after movement.

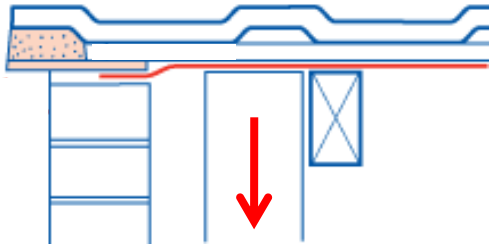

Verge

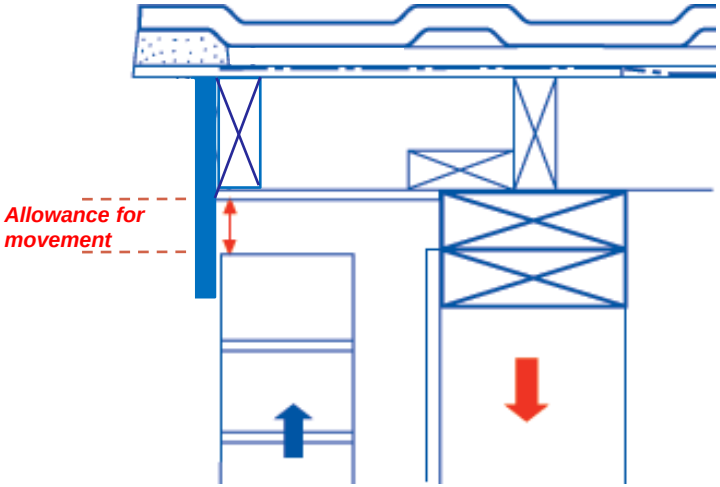

As built

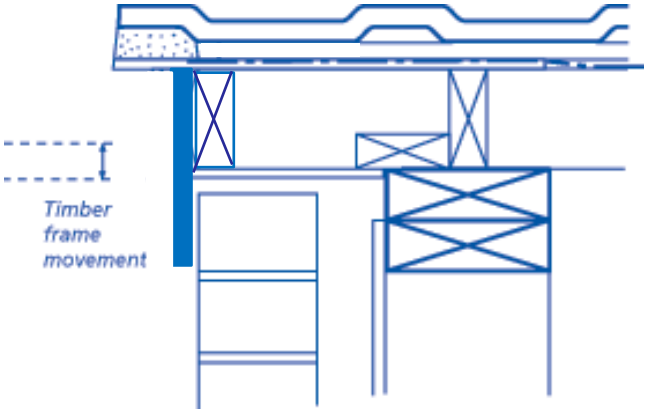

After movement

Good craftsmanship guidance - verge undercloak

Setting out the roof and installing the undercloaks

The red shapes represent plan views of exaggerated 'out of square' houses. The grey rectangular strips represent verge undercloaks.

If the walls are not square, straight and true it may be impossible for the roofer to maintain the required undercloak overhang.

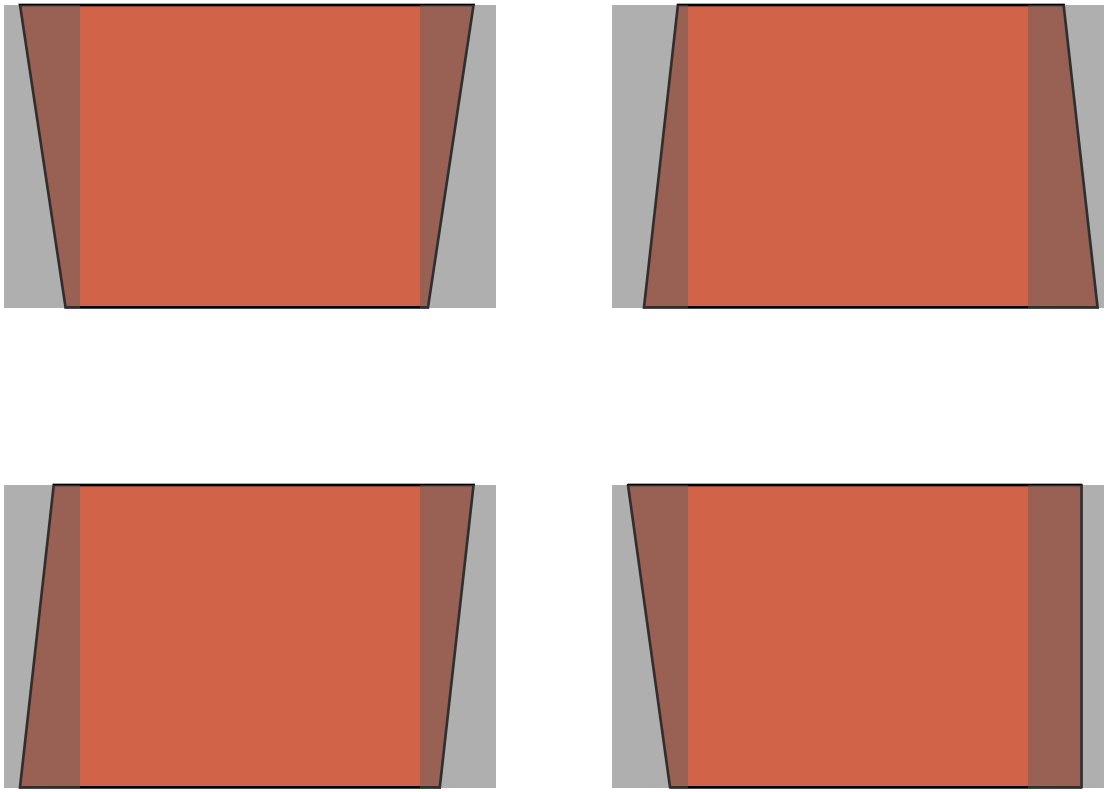

Good setting out of the roof tiles/slates is critical to the successful construction of a wet undercloaked verge.

Wet mortar work - verge undercloak

The importance of correctly setting out of the wet verge undercloak must not be overlooked.

The top image shows an example of insufficient overhang and hence the drip is not sufficient to shed water from the wall face.

The bottom image to the right of this text shows an example of an excessive overhang and the undercloak and mortar bed are collapsing.

For slates or plain tiles NHBC require the undercloak to project 38mm to 50mm beyond the gable wall or bargeboard. Interlocking tiles can project 30mm to 60mm.

Setting out and shunting interlocking tile

Please refer to tile manufacturer for shunting capabilities of individual tile types and the availability of half tiles, three quarter tiles and tile-and-a-halves.

The practice of ‘shunting’ tiles assists with setting out making it possible to achieve a full tile at verges in some instances. However ‘shunting’ will not be able to achieve full tiles verge to verge in all cases. Where full tiles at the verges cannot be achieved a minimum of a half tile must be achieved.

The top image shows interlocking tiles shunted to a closed position (0mm).

The bottom image shows tiles in a shunted open position (+3mm per tile).

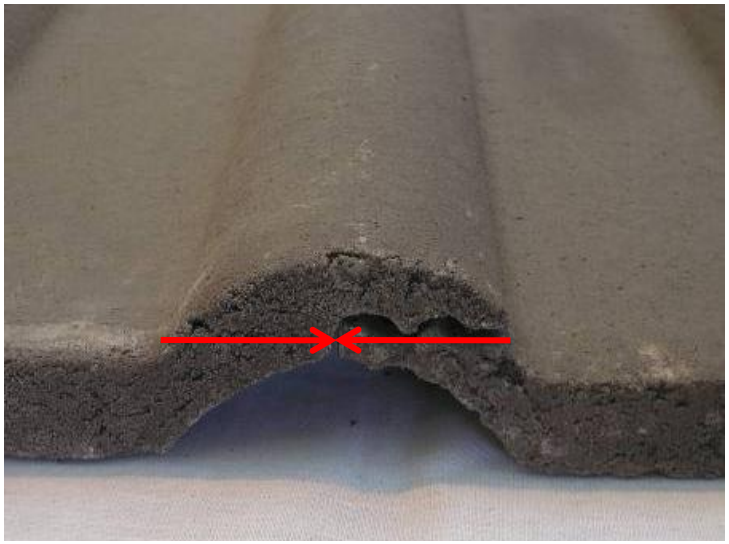

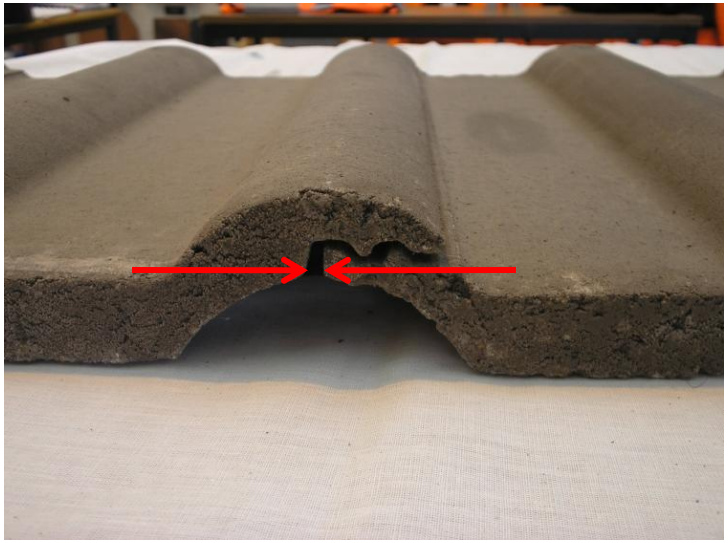

Images from the publication; Roof tiling and slating by Kevin Taylor

Setting out - concrete interlocking tiles (concept)

1. Tiles short of verge when spaced with closed joints.

2. Shunt to achieve full tiles to verges with undercloak overhang within tolerance.

3. If shunting cannot achieve full tiles, most manufacturers have half or other non standard tile sizes across many of their single lap interlocking tile ranges.

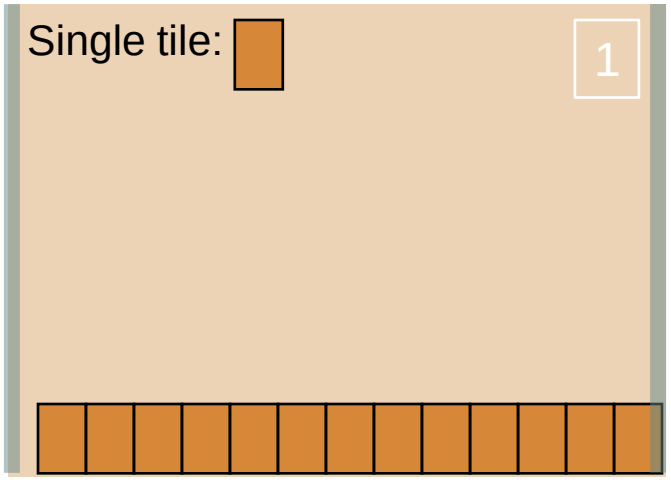

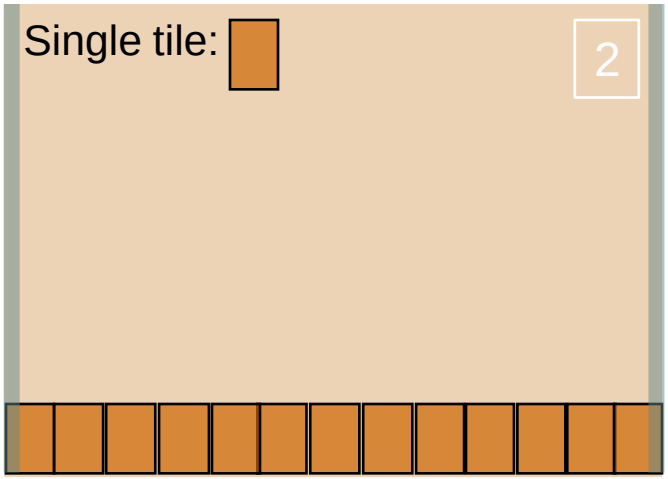

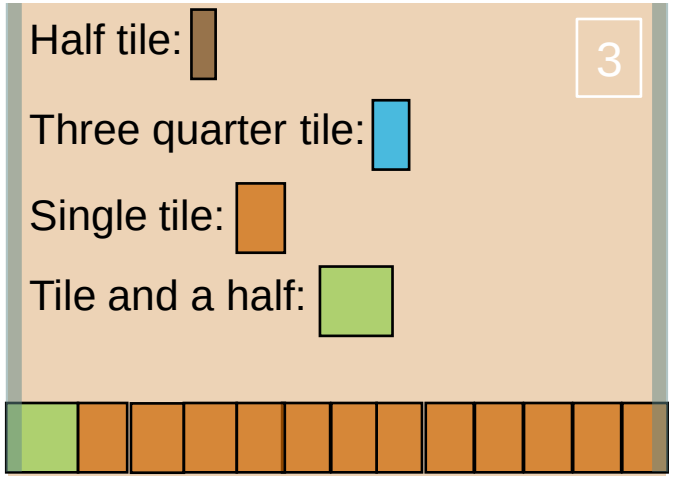

With reference to non standard tile sizes:
The choice of product/tile range should reflect the complexity of the roof design.

Setting out - concrete interlocking tiles

With reference to the previous slide:

1. This is a practical way of laying tiles out to establish the overhang at the verge. Alternatively a staff can be used.

2. The overhang is measured (then divided by two). This works to full tiles with a 45mm overhang in this example.

3. The undercloak overhang is within the accepted 30-60mm.

4. A string line is used for undercloak alignment.

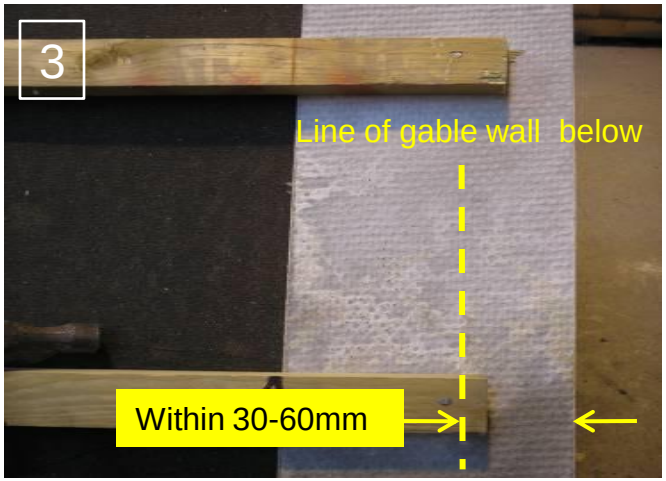

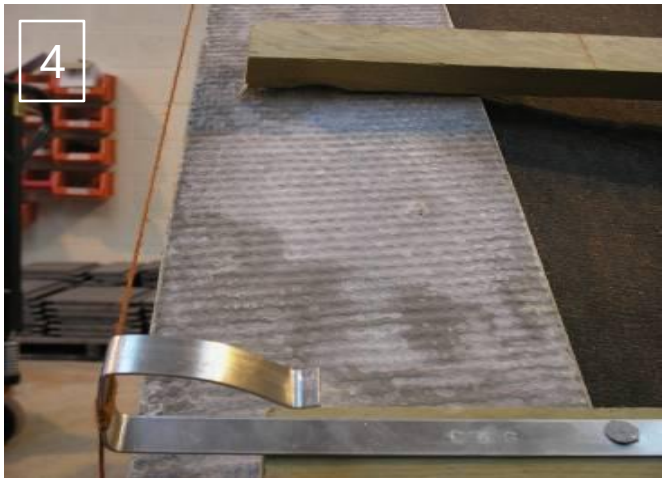

Images from the publication; Roof tiling and slating by Kevin Taylor

Bedded undercloak - key points

- ✓ Fully bed the undercloak on mortar, alternatively a suitable exterior grade bedding sealant could be used.
- ✓ Where a bargeboard is used, the undercloak should be securely nailed to a true line
- ✓ Battens located 25-50mm from face of overhang
- ✓ Use a string line to achieve a straight edge
- ✓ Where verge clips are specified, they should be twice nailed

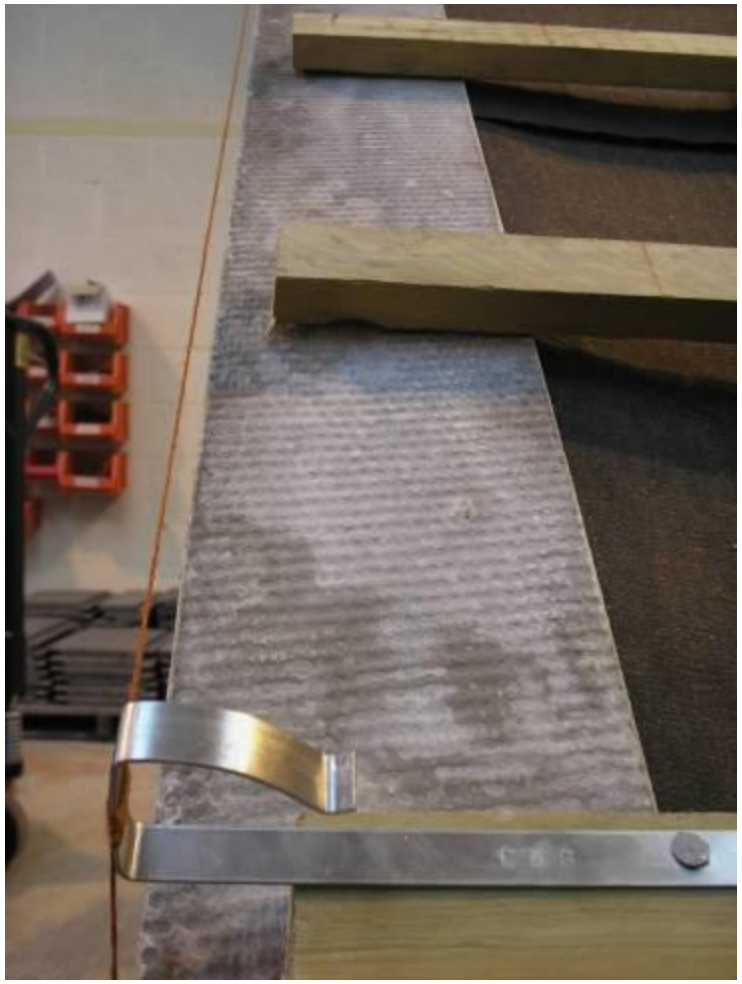

Image from the publication; Roof tiling and slating by Kevin Taylor

Good craftsmanship guidance - wet verges

1. The width of the mortar bed should be at least 100mm when compressed.

2. The mortar needs to be compressed/ squeezed out as the tile is fixed into position.

3. Pointing to the verge; the general technique should ensure that the mortar is again compressed into position.

4. An example of neat shadow pointing.

Images from the publication; Roof tiling and slating by Kevin Taylor

Good craftsmanship guidance - verge clips

Depending on the tile profile and manufacturer, verge clips may be sized for left and right hand. Alternatively, some manufacturers provide universal ‘sprung’ clips suitable for both left and right hand verges. Verge clips should be twice nailed.

There are various types of clip available, it is vitally important to use the correct clip type. Please refer to the tile manufacturers information.

The verge tile clip in the bottom image is doing nothing to assist the securing of the verge tile!

Verge tile clips should be twice nailed and the clips must be in contact with the tiles to be effective.

Top image from the publication; Roof tiling and slating by Kevin Taylor

Plain double lapped tiles and slates (concept)

Plain tile and slate roofs do not have to be set out. The likely outcome of ‘not setting out’ is that of cut tiles/slates being required. This is illustrated in the right hand verge diagram. Dependant upon the size of the roof, this can result in a large amount of cuts and hence this can be time consuming.

Alternatively plain tile and slate roofs can be set out in a similar way to interlocking tiles. By using full tiles/slates together with ‘spacing’ this can avoid cut tiles. If this does not work out then it may be necessary to use a tile/slate-and-a-half together with spacing. This is illustrated in the left hand verge diagram.

However, it must be remembered that plain tile (a side lap of 55mm minimum must be maintained) and slate roofs both require half bonding.

Setting out and ‘cutting-in’ approach

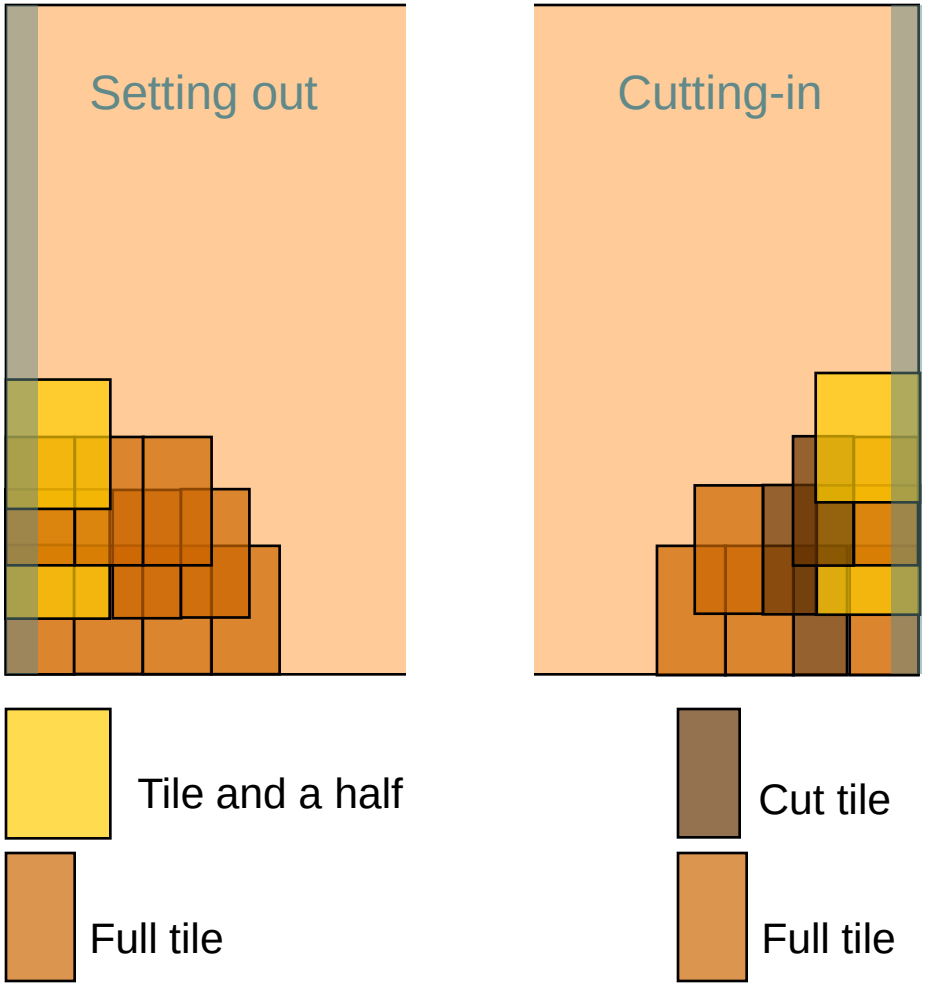

Good craftsmanship guidance - ‘cutting-in’ approach

With reference to the previous slide:

1. As a result of not setting out; a cut tile is required and is marked.

2. A cut tile is inserted, ensuring a tight fit.

3. Bedding onto the under eaves course. It is important that this is ‘bedded’ and not just pushed in at a later stage.

4. Bedding onto the first course, again it is important that this is ‘bedded’ and not just pushed in at a later stage.

Images from the publication; Roof tiling and slating by Kevin Taylor

Good craftsmanship guidance - plain tile/slate wet verges

5. The mortar should be compressed and squeezed out as the tile is fixed into its final position.

6. Pointing with attention to detail should ensure that verge mortar is compact and add to overall durability.

7. Bedding the eaves course on a slate roof.

8. Pointing the slate verge. Note, no mortar between slates allowing/providing drainage.

Images from the publication; Roof tiling and slating by Kevin Taylor

Wet mortar work - valleys

Valleys should be formed using one of the following:

- pre-formed GRP
- valley coursing tiles (plain tiles)
- valley trough tiles (interlocking tiles)
- non-ferrous metal
- a proprietary system

In roofs with plain tiles, purpose-made valley coursing tiles should be used. Adjacent roof tiles should be cut neatly to form a smooth junction, preferably cutting from tile-and-a-half tiles.
All valley tiles should be fixed in accordance with the manufacturer's recommendations and small cut tiles should be avoided.

Construction should be adequate in relation to:

- depth
- width
- undercloaking
- pointing
- adequate support
- pitch

One of the main reasons why mortar fails and comes out of wet valley details is because the mortar has been initially 'pushed in' and not 'bedded'.

Image from the publication; Roof tiling and slating by Kevin Taylor

Wet mortar work – lead lined valley

Lead-lined valleys should be Code 4 (colour coded blue) or Code 5 (colour coded red) and supported on gutter boards of 19mm thick exterior grade ply or as specified. Lead in valleys should be laid in lengths not exceeding 1.5m and be lapped 150mm at each length. Adjacent roof tiles should be cut neatly to form a smooth junction, preferably cutting from tile-and-a-half tiles.

Roof tiles should be cut to the correct rake. Mechanical cutting gives a neater appearance than hand cutting. The tiles should be bedded in mortar, leaving a minimum 100mm wide channel (125mm minimum for pitches below 30).

The mortar should be bedded on an undercloak (for example slate) to prevent direct contact between the lead and the mortar. Mortar should not bridge the welt detail.

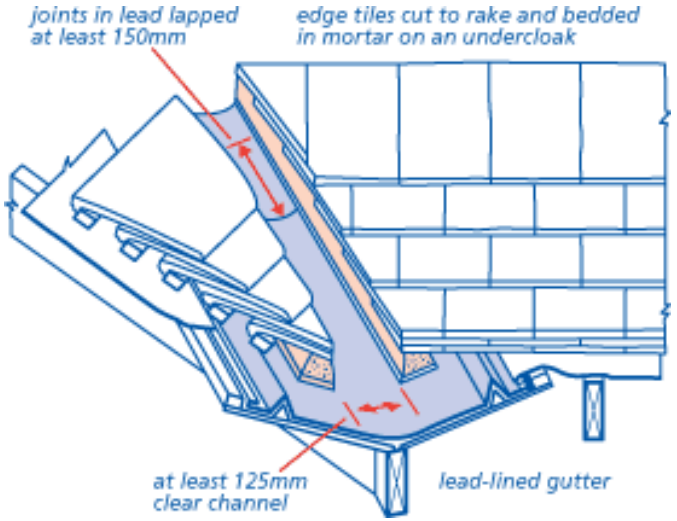

Wet mortar work - typical proprietary GRP valley detail

Proprietary valley/gutter systems should be fixed in accordance with the manufacturer's guidance.

Valley board arrangements are particularly important with proprietary systems. Manufacturers details do vary, typical details include:

- 6mm thick plywood laid over the rafters (nogging/dwangs required to support tile batten ends)
- 18mm plywood fitted between the rafters/flush with the top of the rafters and supported on noggings/dwangs

Plywood should be exterior grade.

Non-ferrous metal saddle flashings or other approved proprietary flashings should be used at intersections and abutments.
Lead flashings should be at least Code 4 (colour coded blue).

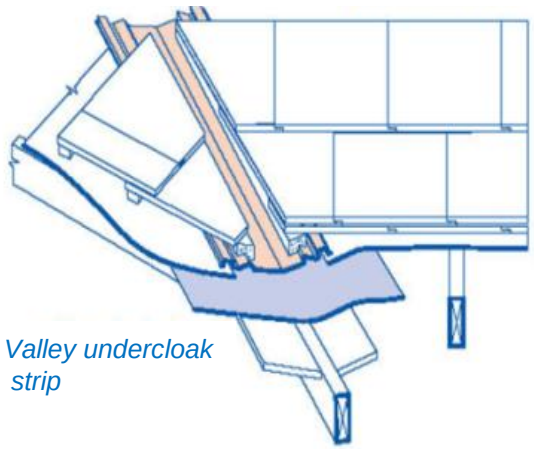

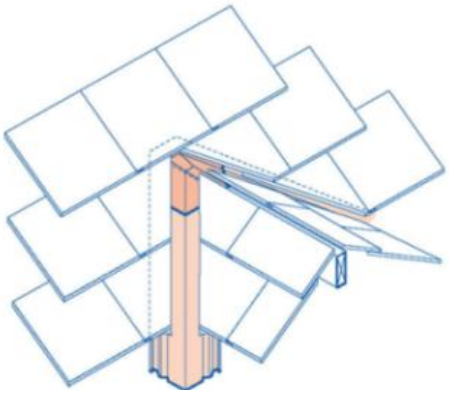

There is no support/fixings for these battens.
Again the importance of trade co-ordination and following the manufactures installation guidance cannot be overstated.

Lead/GRP valley length and lap details

The valley sheet material lap is fundamental in achieving a weathertight valley detail.

The true pitch of the valley should not be less than the minimum allowed pitch and GRP or other materials should be lapped in accordance with manufacturer's recommendations.

Lead valleys
Lead in valleys should be laid in lengths not exceeding 1.5m and be lapped 150mm at each length.
GRP valleys
Rather than generic guidance only manufacturer's valley product guidance information, typically include product codes for ease of specification and ordering.

Use the manufacturers product specific guidance for grp valleys

Rafter Pitch (degrees)	Roof area less than 25 m²		Roof area from 25 m² to 100 m²		Minimum Lap Length (mm)
	Required Valley Product Code	Maximum Length (m)	Required Valley Product Code	Maximum Length (m)	
17.5 to 22	401/2 SVTU	7.0	Not applicable	Not applicable	350
22.5 to 29	RP3/4, 361/2, 401/2, SVT, SVTU	7 0	401/2, SVTU	14.5	300
30 to 34	RP3/4, 361/2, 401/2, SVT, SVTU	7.5	401/2, SVTU	15.0	200
35 to 39	RP3/4, 361/2, 401/2, SVT, SVTU	7.5	401/2, SVTU	15.5	200
40 to 44	RP3/4, 361/2, 401/2, SVT, SVTU	8.0	401/2, SVTU	16.5	150
45 to 49	RP3/4, 361/2, 401/2, SVT, SVTU	8.5	401/2, SVTU	17.0	150
50 to 55	401/2, SVTU	9.0	401/2, SVTU	18.5	150

Good craftsmanship guidance - interlocking tiles/GRP valley

1. The valley/gutter interface detail will usually involve notching the fascia board or the provision of a lead saddle. Trade co-ordination is required.

2. A full mortar bed should be positioned on the sanded strip.

3. Tiles should be fully bedded, the mortar bed compressed and tile securely fixed.

4. Excess mortar should be removed. Bedding and pointing should be completed in one operation.

Images from the publication; Roof tiling and slating by Kevin Taylor

Working sequence/practice

1. The valley tiles have been marked ready for final cutting. These tiles have not been bedded.

2. There are several issues of concern with this valley including typical damage from in-situ tile cutting with a disc cutter.

3. These tiles were cut in-situ.
Mortar will not adhere well in this dust laden valley area.

4. The sanded mortar key strip is covered with dust as a result of in-situ cutting.
These tiles have not been bedded.

Good craftsmanship guidance - cutting valley tiles

1. It is easy to set out and cut valley tiles, two tiles back from the valley line. Tile up to the valley ensuring coverage two tiles back from the valley cutting line.

2. Mark the cutting line two tiles back. Carefully cut the tiles in-situ.
(a stone blade will not cut through the timber battens)

3. The cut tiles can now be removed. Continue with full tiles inserting the cut tiles at the valley.

Images from the publication; Roof tiling and slating by Kevin Taylor

Cutting and fixing plain tiles at valley details

Both of these images show that tile-and-a-halves have been omitted in places.

Initial under-ordering of tile-and-a-halves can lead to temporary shortages on site, until these materials are re-ordered and delivered to site. The temptation on site is to carry on regardless and use an ad-hoc solution. The omission of tile-and-a-halves leads to the requirement to use small cut tiles into the valley detail.

Unfortunately the use of small cut tile into the valley detail will lead to fixing issues and likely eventual failure, as shown in the adjacent images.

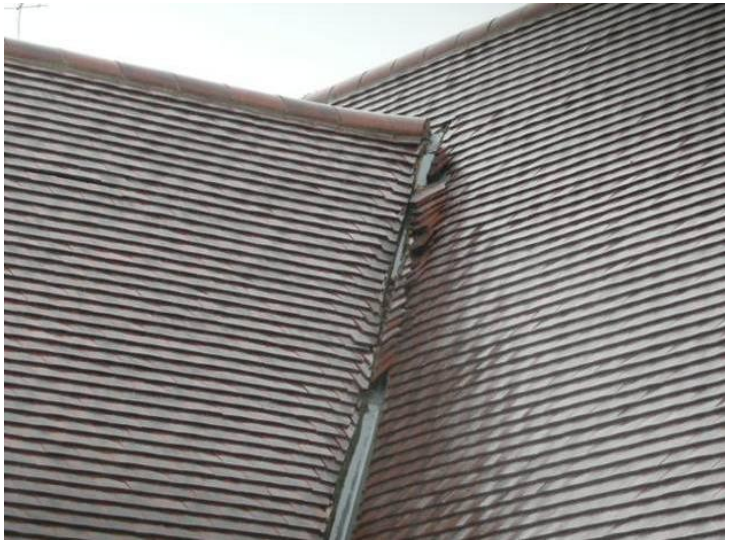

Good craftsmanship guidance - cut valley (plain) tiles

1. Valley tile has been cut to a weak point. (bad practice)

2. Cutting the adjacent tile allows the valley tile to be wider and hence stronger at the tail. (good practice)

3. Use of small cuts to valley. (bad practice) The use of small cut tiles should be avoided.

4. Instead of using small cuts to the valley the use of tile-and- a-half tiles is preferred . (good practice)

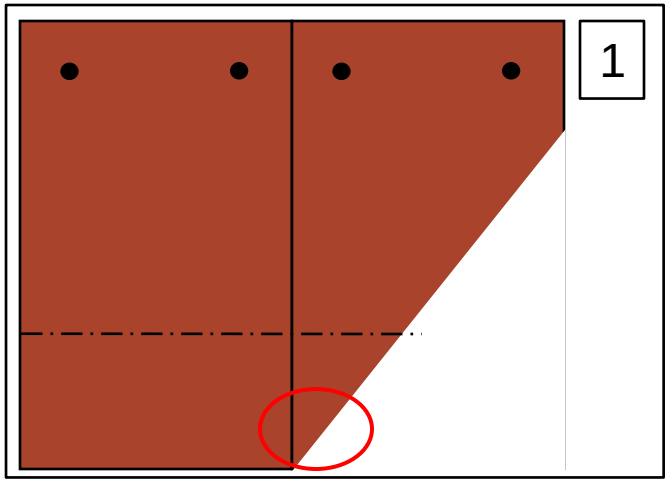

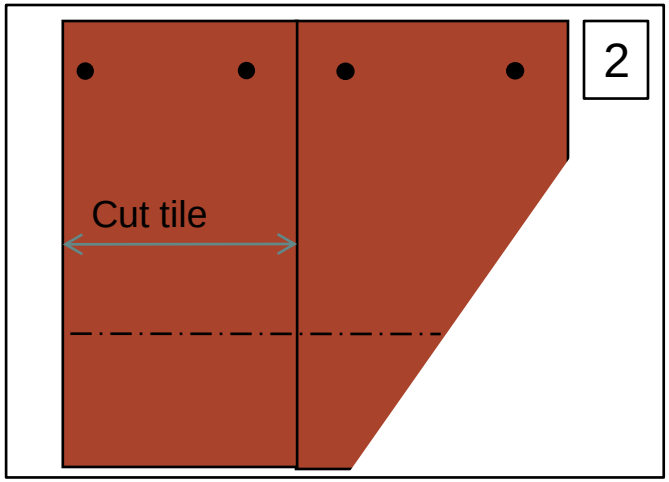

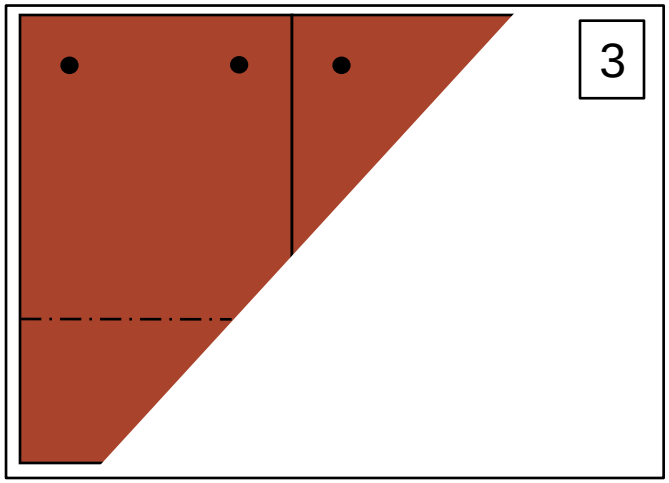

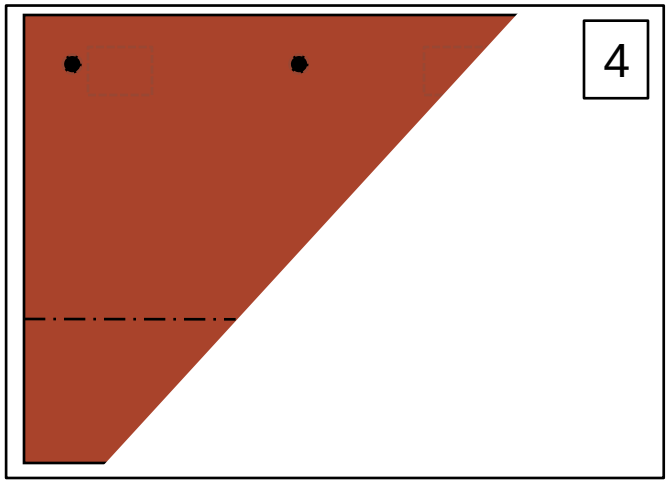

Where required, tile-and-a-halves should be used.
Using a small cut tile into the valley is likely to lead to failure.

Other solutions - dry systems

There are alternatives to wet mortar ridges, hips, verges and even valleys. The use of dry systems does need to be checked with planners.

The modern dry systems incorporate mechanical fixings at both ridge and hip details ensuring that these tiles are fully fixed throughout their length. Systems typically include three way mitre components to deal with ridge/hip interfaces.
Dry ridge systems can include integral ventilation.

Verge tiles and dry verge systems can provide maintenance free details. Dry verge systems typically include components to deal neatly with the verge/ridge interface.

Dry valley systems complete the range of dry systems and hence allow a mortar free roof to be specified.

The following slide shows typical dry systems.

Image from the publication; Roof tiling and slating by Kevin Taylor

Other solutions - typical dry systems

Fixed strictly in accordance with the manufacturers detail, dry roofing systems can be a trouble free long term solution.

In addition, production on site is not delayed by the usual cold, wet or very hot weather working issues associated with wet mortar work!

Key advantages of dry systems

- ✓ Removal of wet work reducing the risk of failure
- ✓ The mortar operation is not vulnerable to cold, wet or very hot weather conditions
- ✓ Provision of ridge level ventilation is easily achieved
- ✓ Dry systems are particularly suitable for timber frames
- ✓ Speed of construction and consistency of quality

'Our claims figures appear to support this move to dry systems, with Scotland experiencing a smaller proportion of pitched roof claims per property covered'

Source: NHBC Technical Extra February 2011

Summary - raising the standards of pitched roof coverings

You should now:

- ✓ Know the extent of pitched roof claims (from session 1)
- ✓ Be clear where to focus your attention as a supervisor (from session 1)
- ✓ Understand the correct use of mortar on roofs
- ✓ Appreciate the benefits of adopting a team approach on site
- ✓ Be aware of alternative solutions

If in doubt, contact:

- ✓ Your NHBC inspector
- ✓ The product manufacturer's technical department
- ✓ NFRC (if the roofer is a member)

End of session