Technical Extra

February 2015 | Issue 17

In this issue:

NHBC
Raising Standards. Protecting Homeowners

Foreword

Welcome to Technical Extra 17

Pre-start meetings between site teams and NHBC building inspectors provide an opportunity to identify and consider specific issues and risks associated with the site and build. Whilst not uncommon in the past, we've developed a more robust framework for these discussions – read the article in Guidance and good practice for more details on the benefits of these meetings.

Readers might be surprised to learn that 15% of the defect-related contacts NHBC receives relate to windows and doors. Ironmongery dominates, with issues relating to handles, locks and hinges accounting for almost half. Comments recorded on customer satisfaction surveys also highlight similar issues; the article 'Ironmongery for windows and doors' provides more information.

As methods of making homes more airtight have been designed, and construction practices have improved, the level of airtightness you can hope to achieve has also progressed. 'Ensuring adequate ventilation to naturally-ventilated dwellings' considers what action should be taken if an airtightness value better than that designed for is achieved. This edition also highlights changes to the air leakage testing industry, with the old registration scheme for testers being replaced by a new ATTMA Scheme.

Other articles in this edition include a reminder of Technical Guidance previously issued relating to minimum foundation depths in clay soils. In Regulation and Compliance, we also discuss openable windows with low cill heights, design and use of autoclaved aerated concrete (AAC) masonry units and CE marking for steelwork fabrications.

Drawing on 10 years' experience of inspecting and monitoring the performance of separating walls and floors, Robust Details Limited has developed animated training videos. These show the key features of each Robust Detail, the sequence of construction, and how to ensure that separating walls and floors can be reliably built so as to meet the required acoustic standards.

Other articles include details of the provision of weep holes and weep vents in masonry walls, potential fire safety issues relating to dummy chimneys over party walls, and current and soon to be published research from the NHBC Foundation.

Finally, in *Technical Extra 16,* I mentioned our review of NHBC Standards format. Work is advancing well, and we intend to launch the newly formatted Standards later this year.

Mark Jones
Head of House-Building Standards

NHBC STANDARDS

Minimum foundation depths in clay soils

Who should read this: Technical and construction directors and managers, site managers, architects and designers.

INTRODUCTION

NHBC resolves hundreds of technical enquiries each year. Where these relate to issues that are likely to be particularly relevant for the wider industry, they might be highlighted within Technical Extra or a Technical Guidance note. This article highlights the type of information provided in the guidance notes and considers minimum foundation depths in clay soils as an example.

REQUIREMENTS

Copies of previous Technical Extra articles or Technical Guidance notes can be readily accessed via Standards Plus, which lists supporting information against the relevant Chapter.

The following relates to minimum foundation depths in clay soils, and is a typical example of the type of information that might be included in a Technical Guidance note.

Question – in clay soils where there is no influence from trees or shrubs and the final ground level is to be raised, what is the minimum foundation depth, and from where should it be measured?

Consideration – foundations should not bear onto clay soil if they are affected by seasonal desiccation, which could result in movement.

Seasonal desiccation can cause movement to a depth of 1.0m in high, 0.9m in medium and 0.75m in low volume change potential soils [NHBC Standards clause 4.4 – D8 (a) and S5].

Answer – minimum depths for foundations on clay soils are as follows:

Volume change potential	Minimum depth (m)
High	1.0
Medium	0.9
Low	0.75

The depth should be measured from:

- the original ground level where seasonal desiccation of the soil is either unknown or is known to be present
- the raised ground level where it is shown by recent tests that the original ground is not desiccated, providing that the foundations are on a good bearing and do not bear onto any fill or topsoil.

YOU NEED TO...

- Ensure foundation depths in clay soils take account of seasonal desiccation.
- Standards Plus provides simple access to a vast library of supporting documents. You can currently gain access via the partner portal, but Standards Plus will be moving to NHBC's website later this year, look out for further information in the near future.

For **technical advice and support**, call **01908 747384** or visit **www.nhbc.co.uk**

NHBC STANDARDS

Ironmongery for windows and doors

Who should read this: Technical and construction directors and managers, architects, designers, manufacturers, specifiers and site managers.

INTRODUCTION

15% of the defect-related contacts NHBC receives relate to windows and doors. In this article, we highlight the type of problems homeowners are reporting and provide guidance on ways to reduce them.

STANDARDS CHAPTER

Chapter 6.7 'Doors, windows and glazing'

REQUIREMENTS

A recent survey undertaken by NHBC has identified that homeowners are reporting a range of problems with windows and doors. The survey identified three prominent concerns:

- ironmongery
- a lack of, or inadequately applied, sealant
- the failure of glazing units.

Ironmongery defects were the top reported complaint, accounting for circa 50%.

Ironmongery failures typically related to handles, locks and, in the majority of cases, hinges.

Difficulty in opening and closing windows and doors was reported as the most common problem.

The ironmongery failures were in areas where window and door usage is likely to be high, such as bedrooms, which may be an indication that the ironmongery is incorrectly fitted or not manufactured to the relevant standard.

NHBC claim files provide further information on the type of defect, for example:

	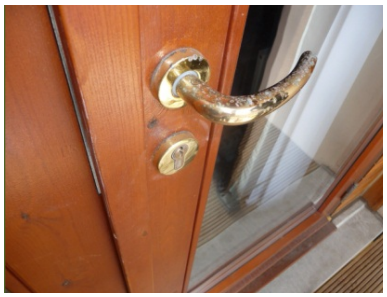	
The window handle appears to have broken internally where a flexible plastic washer has split and opened up.	The exterior metal lever handle furniture is pitted and tarnished.	Mortices have been cut in the sliding door but furniture has not been fitted.

For **technical advice and support**, call **01908 747384** or visit **www.nhbc.co.uk**

REQUIREMENTS (CONTINUED)

Comments included in recent customer satisfaction surveys[1] have highlighted that window and door problems can affect multiple units, with homeowners reporting, for example: "The upstairs windows are difficult to open and close" and "I've had to have every window adjusted or the hinges replaced".

NHBC Standards Chapter 6.7 'Doors, windows and glazing' M6(a) recommends that ironmongery should be provided in accordance with the design and specification. For critical functions, materials should comply with appropriate standards, including the following:

BS EN 1935	Building hardware. Single axis hinges. Requirements and test methods.
BS 3621	Thief resistant lock assembly. Key egress.
BS 8621	Thief resistant lock assembly. Keyless egress.
BS 10621	Thief resistant dual-mode lock assembly.
BS 4951	Specification for builders' hardware: lock and latch furniture (doors).
BS 5872	Specification for locks and latches for doors in buildings.
BS EN 1154	Building hardware. Controlled door closing devices. Requirements and test methods

NHBC Standards Chapter 6.7 'Doors, windows and glazing' S3 recommends that doors and windows shall be correctly located and securely fixed, including:
(g) general ironmongery – where required, hinges and other ironmongery shall be housed neatly and flush with the surface. The full complement of matching screws should be provided and properly screwed home. Locks should not be fitted in mortices too tightly, keyholes should be aligned and locks should turn easily. The clearance between a door handle and stop should be at least 25mm.
(h) door hinges – to reduce twisting, doors should be hung on hinges as follows:

External door	1 $^1/_2$ pairs x 100mm
Fire door	1 $^1/_2$ pairs* x 100mm (*1 pair where rising butts are used)
Airing or cylinder cupboard	1 $^1/_2$ pairs x 75mm
Other internal	1 pair x 75mm

In July 2012, we produced an article on multipoint locks, identifying the set of standards prepared by BSI, the Door & Hardware Federation and Secured by Design (e.g. PAS 3621, PAS 8621 and PAS 10621). This set of standards enables the specification of multipoint locks to a recognised standard that is on a par with the security aspect covered by single point lock standards. For further information on this see *Technical Extra Issue 07*.

The NHBC Foundation is undertaking research into windows and doors with a view to publishing guidance later this year.

[1] NHBC National New Homes survey measures homeowner satisfaction at both eight weeks and nine months after legal completion.

YOU NEED TO...

- When specifying, manufacturing or using ironmongery, ensure that it is correctly fitted and manufactured to the relevant standard.

REGULATION AND COMPLIANCE

Update on air tightness testing

Who should read this: Technical and construction directors and managers, architects, designers and site managers.

INTRODUCTION

This article provides an important update on air leakage testing. The British Institute of Non-Destructive Testing (BINDT) Registration Scheme for air-tightness testers ceased to operate from 1 January. A new scheme is being introduced by the Air Tightness Testing & Measurement Association (ATTMA), which is designed to harmonise and improve standards.

REQUIREMENTS

Approved Document Part L states that Building Control Bodies (BCBs) "are authorised to accept..." test certificates from ATTMA or BINDT registered testers, but does not mandate them. This infers that a BCB can accept air-tightness tests results from anyone, providing they are satisfied that they are competent; this can be difficult and time consuming if the tester is not a member of a recognised scheme and can cause delay. Therefore, the generally favoured option has been for builders to engage testers who are members of an authorised scheme, whose role is to ensure that their members are competent.

BINDT and ATTMA have worked together to create a new all-encompassing ATTMA-branded Scheme for air-tightness testing, which replaced the existing BINDT and ATTMA schemes on 1 January 2015.

The ATTMA Scheme defines its members as companies to ensure 'corporate accountability', while their testing staff remain individually certified. Both member firms (and their testers) will be properly audited to confirm their organisation's competence, even if the 'firm' is a sole trader.

Individual testers will now be certified to three new levels:

- **Level 1** – testers are certified for testing dwellings and simple buildings up to 4000m^3 in volume.
- **Level 2** – testers are certified to test all but very large, complex and high-rise buildings.
- **Level 3** – testers are certified effectively as 'experts' in air-tightness testing.

All ATTMA testers will carry ID cards stating their credentials, backed up by a register of ATTMA Testers and their respective certification levels on the **www.attma.org** website.

For **Building Regulations advice and support**, call **0844 633 1000** and ask for **'Building Control'** or visit **www.nhbc.co.uk/bc**

REQUIREMENTS (CONTINUED)

The new ATTMA Scheme has a full-time Scheme Manager (**manager@attma.org**) whose role is to both police and support members. The scheme manager is an experienced air-tightness tester and compliance manager. The Manager will also act as a conduit for the technical expertise that exists widely within the industry and its supply chain; thereby helping to raise standards and capability throughout their membership. The Manager is also available to assist BCBs and builders, for example, by advising on the testing requirements on more complex projects or providing independent advice where disagreements between parties have arisen on a given project.

The new scheme will require key results data to be recorded in a secure database, from which key stakeholders – such as BCBs and builders – can retrieve and verify tests. The system will also generate a standardised ATTMA Test Certificate to back up (or replace) the tester's own. This will improve the availability of test data to builders, BCBs and Energy Assesors, increasing confidence in the industry and the companies involved.

YOU NEED TO...

- The BINDT Registration Scheme for air-tightness testers has been replaced by a new ATTMA Scheme, designed to harmonise and improve standards. Ensure you are aware of how this impacts you.

REGULATION AND COMPLIANCE

Ensuring adequate ventilation to naturally-ventilated dwellings

Who should read this: Technical and construction directors and managers, architects, designers and site managers.

INTRODUCTION

Changes to Approved Document L in 2006 have led to dwellings becoming substantially more airtight than they were in the past. Whilst increased airtightness is beneficial for improving energy efficiency, there are consequences for ventilation: with fewer minor gaps in the fabric, there will be less unintended ventilation to supplement the background ventilation provided.

Adequate ventilation is necessary to ensure that moisture and pollutants within the dwelling are managed and indoor air quality is satisfactory. Research[1] has established a link between indoor air quality and the health of occupants, with effects including a range of serious conditions such as allergic and asthma symptoms, lung cancer, chronic obstructive pulmonary disease, airborne respiratory infections and cardiovascular disease.

[1] Mechanical ventilation with heat recovery in new homes – Interim Report, Zero Carbon Hub, January 2012

REQUIREMENTS

Where ventilation System 1 (background ventilators and intermittent extract fans) and System 2 (passive stack ventilation) are used, Approved Document F (2010) recommends that an increased total ventilator area is provided:

- where the design air permeability is tighter than $5m^3/(h.m^2)$ at 50 Pa
- where the as-built air permeability is tighter than $3m^3/(h.m^2)$ at 50 Pa.

(see Tables 5.2a and 5.2b and Clause 5.10 in Approved Document F).

As builders have become more used to delivering airtight dwellings, an increasing proportion of homes are over-achieving in terms of airtightness, which gives rise to a key question:

What action should be taken when a dwelling has been designed with an air permeability leakier than $5m^3/(h.m^2)$ and, when tested, the as-built air permeability is tighter than $3m^3/(h.m^2)$?

In these situations, the dwelling will have only the lower total equivalent ventilator area where the increased total equivalent ventilator area should have been provided.

REQUIREMENTS (CONTINUED)

Given the established links between airtightness, indoor air quality and occupant health, it is important that the issues are not ignored. The following table provides guidance for this situation:

Designed air permeability [$m^3/(h.m^2)$]	As-built air permeability[$m^3/(h.m^2)$]	Action (for AD F) (see note 3)
Leakier than 5	Leakier than 5	No action needed
	Between 5 and 3	No, but see note 1
	Tighter than 3	Yes, see note 2
Tighter than 5 (increased total ventilator provided)	Any figure	No action needed

Table 1

Notes

1. Good practice would be for the builder and BCB to discuss the potential risks to IAQ and health of over-achieving in terms of airtightness. This should help to reduce issues of under ventilation on future dwellings.
2. There is a risk that the dwelling will not be ventilated adequately, so additional background ventilation should be provided by means of larger or additional background ventilators (or by installing mechanical ventilation).

   It is not advisable for remedial action to be taken that creates additional gaps in the building fabric. Such measures would be unlikely to distribute ventilation throughout the dwelling sufficiently evenly.
3. For AD L, the as-built SAP should take account of the as-built air permeability.

YOU NEED TO...

- Ensure that your designers, site managers and air tightness testers are aware of the potential need to revisit the ventilation strategy where a new home has achieved an air leakage value lower than $3m^3/(h.m^2)$.

REGULATION AND COMPLIANCE

NHBC updated guidance in respect of guarding to openable windows with low cill heights

Who should read this: Technical and construction directors and managers, architects, designers and site managers.

INTRODUCTION

This guidance is intended to provide a common approach when assessing measures to provide protection from falling in relation to openable windows (including french windows) in external walls to dwellings. This guidance applies where there is a risk of falling from a height of more than 600mm and has been agreed as meeting the minimum requirements of Building Regulations.

REQUIREMENTS

Approved Document K provides recommendations for the minimum height of windows (800mm) above floor level and guarding for windows where they fall below these levels.

Increasingly, designers are incorporating deeper windows or french windows with low-level cills into their dwelling designs. The cills to these windows can provide platforms to aid climbability by children. As such, the recommendations for guarding height to windows may not be appropriate to afford the required protection and to ensure the safety of the occupants, and hence achieve compliance with the functional requirements.

According to Childata:

- 50% of four-year-old children can step up 410mm, and 3% can step up 550mm. Any cill height lower than 600mm may therefore be considered readily climbable by children
- only 5% of four-year-old children are taller than 1200mm, so most would be fairly stable standing on an upstand if a minimum guard height of 700mm were to be maintained.

The guidance in this section is based on these guide dimensions.

French windows

Diagram 1 – when considering guarding to French windows, a minimum guard height of 1100mm measured from finished floor level is required to ensure adequate protection from falling.

Where an upstand is formed (up to 300mm high) to the base of the opening, an 800mm guard height should be maintained above this level.

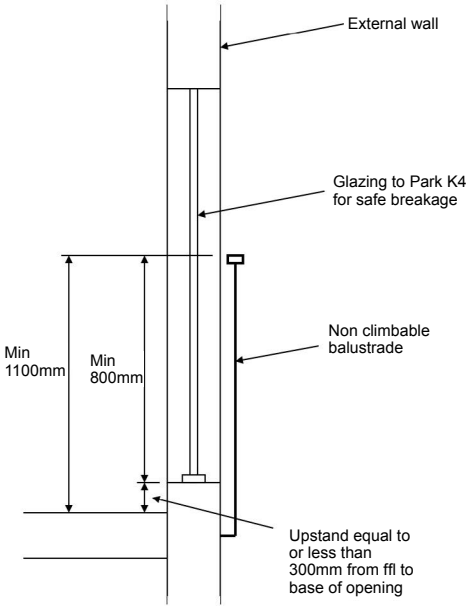

For **Building Regulations advice and support**, call **0844 633 1000** and ask for **'Building Control'** or visit **www.nhbc.co.uk/bc**

REQUIREMENTS (CONTINUED)

Openable windows in external walls with cill heights between 300mm and 800mm above finished floor level

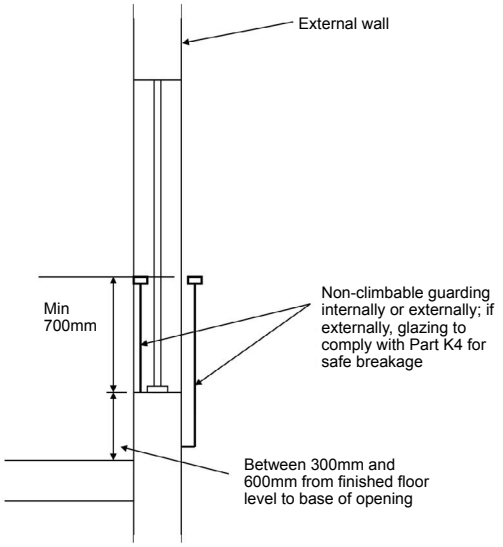

Diagram 2 – indicates acceptable guarding arrangements where cill heights are between 300mm and 600mm above finished floor level. In this case, the cill is considered to be readily climbable by children, so a non-climbable barrier height of min 700mm needs to be maintained above the cill.

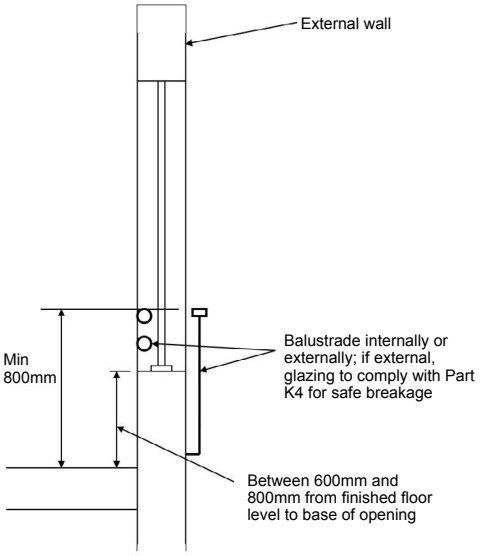

Diagram 3 – indicates acceptable guarding arrangements where cill heights are between 600mm and 800mm above finished floor level. In this case, the cill is not considered to be readily climbable by children, so compliance can be achieved by providing barrier rails to maintain an overall guard height of 800mm above floor level.

Openable windows in external walls in combination with fixed glazing, cill heights less than 800mm above finished floor level

An increasingly common arrangement is for a lower fixed glazed pane to be used in conjunction with an openable window above. The fixed glazing may start at or near to floor level. Similar considerations as to the suitable guard height and the climbability of the cill apply.

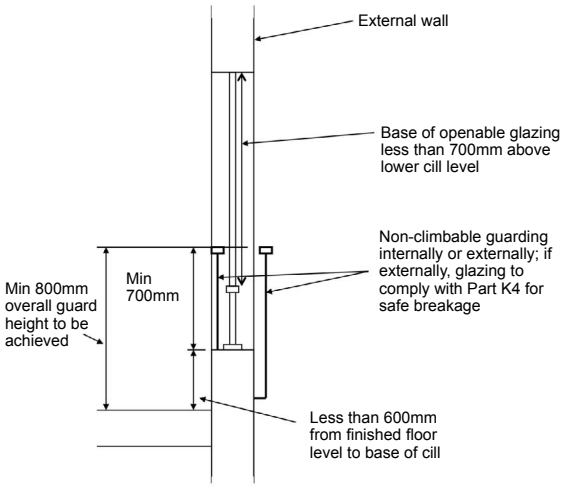

Diagram 4 – indicates an arrangement where fixed glazing is incorporated in the lower part of the window. In this case, as the cill is less than 600mm above finished floor level, it is considered readily climbable by children. As the base of the openable window is less than 700mm above the cill, additional guard arrangements are required.

For **Building Regulations advice and support**, call **0844 633 1000** and ask for **'Building Control'** or visit **www.nhbc.co.uk/bc**

REQUIREMENTS (CONTINUED)

Diagram 5 – in this example, the cill is considered readily climbable by children as it is less than 600mm above finished floor level, but the fixed glazing has been provided to a minimum height of 700mm above the cill level. Provided the fixed glazing is designed to act as a barrier to falling and also to provide impact resistance, a further balustrade would not be required.

Diagram 6 – as the cill height in this example is a minimum 600mm above floor level, climbability of the sill by children is not a consideration. The lower section of fixed glazing in this case needs to be provided to maintain an overall height of guarding of 800mm above floor level. If the fixed glazing is designed to act as a barrier to falling and also to provide impact resistance, a further balustrade would not be required.

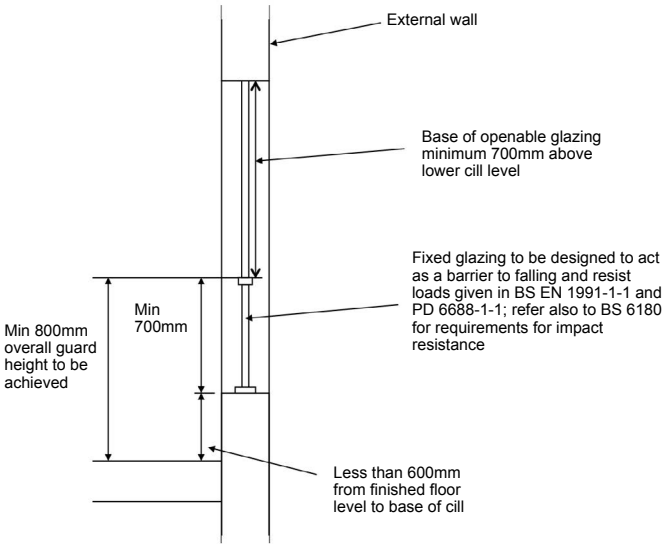

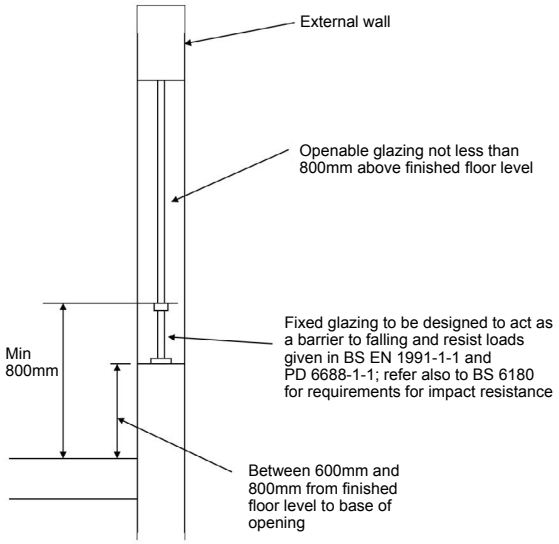

Conflicts between barrier height and means of escape

Whilst Building Regulations contain a minimum height for guarding to openable windows for the purposes of protection from falling, there is also a maximum height to satisfy means of escape. The base of window openings in this case should be no more than 1100mm above floor level to satisfy the requirements for escape windows.

With careful advanced planning and design, using the design principles above, it should be possible to design window openings that are capable of satisfying both these criteria. However, in certain situations, or when the above guidance is applied retrospectively to windows with low cill heights, conflicts may arise. This conflict is most likely to occur where the cill height is between 400mm and 600mm above floor level, as the requirement to maintain a 700mm barrier height above this level will then cause the overall height of guarding to exceed 1100mm.

The alternative solutions to satisfy the means of escape requirements for this situation are:

a Ensure there is another window in the same room that is suitable for escape.

b Ensure there is a bypass door to an adjacent room that contains a window suitable for escape.

c Provide a protected escape route via fire doors and fire resisting partitions enclosing the stair in a dwelling house or the entrance hall within a flat, as long as the room is not an inner room.

Where these solutions are not viable, or as a further alternative, it may be possible that the cill could be considered as a suitable platform to step on to prior to egress through the opening portion of the window.

For this to be possible, the cill should be low enough to allow for an easy step up; a maximum height of 500mm is considered suitable for escape purposes. Also, the clear space to the cill should be deep enough to allow a foothold; a minimum depth of 150mm is considered suitable.

REQUIREMENTS (CONTINUED)

Diagram 7 – an example for a cill height of 500mm with a lower pane of fixed glazing 700mm high, giving an overall barrier height of 1200mm from finished floor level which is above the maximum 1100mm permitted for an escape window.

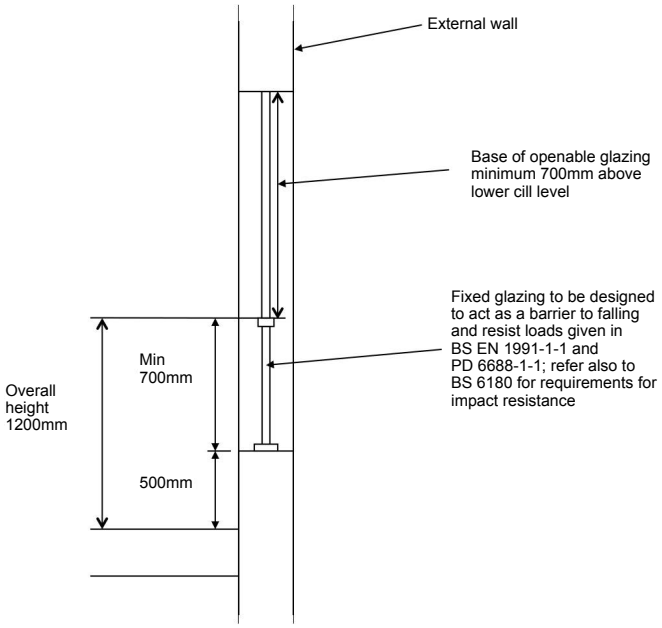

Diagram 8 – indicates the maximum height of the cill to ensure an easy step up and the clear space required on the cill to enable a foothold. In addition, the top of the frame to the fixed glazing should be suitably robust to support the weight of a person sitting on the frame as they egress through the window. The minimum size of the openable window for egress purposes should be maintained.

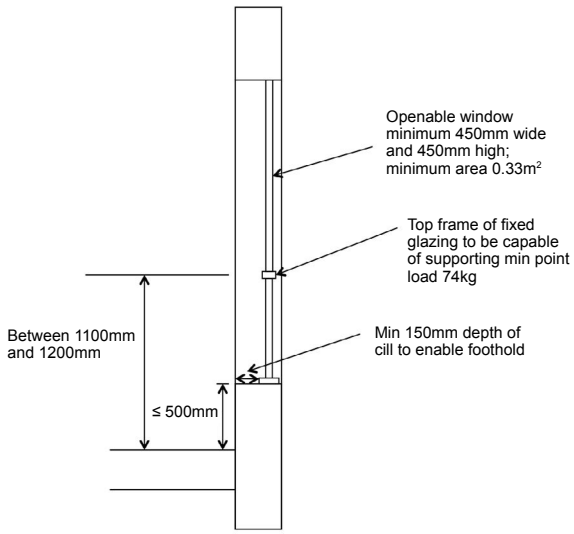

The above is an example of a conflict between the requirements for protection from falling and means of escape. There may also be other scenarios where a conflict may arise, particularly where advanced planning to cater for conflicting criteria is not undertaken. The retrospective fitting of a balustrade externally to a window, for instance, would prevent the opening of the window for means of escape, so alternative arrangements would be needed to satisfy the means of escape requirements. Also, if the window was obstructed from opening, consideration would need to be given as to how purge ventilation could be provided to the affected room.

YOU NEED TO...

- Ensure a minimum barrier height of 1100mm from finished floor level is provided to french windows.
- Ensure, wherever possible, that openable windows are positioned a minimum 800mm above finished floor level.
- Where openable windows below this level are unavoidable, ensure adequate protection from falling and impact is provided by following the design guidance above.
- Identify and resolve at the design stage where conflicts arise between minimum barrier heights for protection from falling and maximum barrier heights for means of escape.
- Further details, including information on the spacing of balusters and window restrictors, will be available on NHBC website in an updated version of NHBC Building Regulations Guidance Note – Glazing, guarding and restrictors in dwellings.

For **Building Regulations advice and support**, call **0844 633 1000** and ask for **'Building Control'** or visit **www.nhbc.co.uk/bc**

REGULATION AND COMPLIANCE

Design and use of autoclaved aerated concrete masonry units

Who should read this: Technical and construction directors and managers, architects, designers, manufacturers, specifiers and site managers.

INTRODUCTION

Autoclaved aerated concrete (AAC) masonry units manufactured in European countries have become increasingly available on the UK market. Although European-manufactured AAC blocks may be similar in size and strength to equivalent UK-manufactured blocks, testing procedures on the continent have traditionally been different.

In consequence, whether masonry is designed in accordance with BS EN 1996-1-1 or the withdrawn BS 5628-1, engineers are advised to be aware of the differences in requirements of masonry design standards when using European-manufactured instead of UK-manufactured AAC masonry units. Particularly in terms of strength testing procedures, manufacturers' declared mean compressive strengths and use of shape factors.

REQUIREMENTS

Compressive strength testing procedures for AAC masonry units

BS EN 771-4 Specification for masonry units – Part 4: Autoclaved aerated concrete masonry units superseded the now withdrawn BS 6073-1. It specifies the requirements for compressive strength of AAC masonry units when tested in accordance with BS EN 772-1 Methods of test for masonry units – Part 1: Determination of compressive strength.

In the UK, AAC masonry units have traditionally been tested as whole blocks with maximum dimensions of length not exceeding 650mm and height not exceeding the length or six times the width. Across Europe, however, AAC masonry units may be much larger, with allowable lengths up to 1500mm and allowable heights up to 1000mm. As a result, BS EN 771-4 has been prepared to encompass the wide range of AAC masonry units available throughout the CEN member countries and, for units that are so large that they cannot fit into a compression machine, the concept of testing cube specimens was introduced. The differences in testing regimes in terms of size, surface preparation and moisture conditioning of test specimens can affect the compression test results.

Declaration of compressive strength of masonry unit

BS EN 771-4 requires manufacturers to declare either the mean or the characteristic compressive strength of masonry units placed on the market, based on compression test results. The compressive strength may be 'normalised' to allow for the effects of test specimen shape and moisture conditioning, in accordance with BS EN 772-1 Annex A. The normalised compressive strength may also be declared by the manufacturer.

Normalisation process and shape factors

The normalisation process involves the application of factors for moisture content and shape of test specimens. The 'shape factor' has two aspects to it, one being the effect of platens on testing small units, the other, more significant one, being for design and influence of mortar etc. on constructed walls.

REQUIREMENTS (CONTINUED)

Assessment of masonry compressive strength for UK design:

- BS EN 1996-1-1
  For UK practice and our NA to BS EN1996-1-1, the value for fk (characteristic compressive strength of masonry) is derived from the equation $fk = K\ fb^{\alpha}\ fm^{\beta}$ where:
  - fb is the normalised mean compressive strength of masonry units derived from the relationship of block strength (generally based on whole block testing), moisture conditioning and shape factor in accordance with BS EN772-1
  - fm is the compressive strength of masonry mortar
  - K is a constant factor developed from Wallette test results
  - α and β are factors applied to fb and fm respectively.

  When designing for masonry compressive strength to BS EN 1996-1-1, the manufacturer's declared unit mean compressive strength, whether based on testing of whole block or 100mm cube specimens, needs to be converted to the normalised mean compressive strength (fb) to make allowance for the variation in acceptable testing regimes. If normalised value is not declared, it is important that the manufacturer's testing regime, including size and moisture conditioning of test specimens, is understood by the masonry designer.
- BS 5628-1
  The value of fk is derived from Table 2 b) or 2 e), depending on the ratio of height to least horizontal dimension.

NOTE – compressive strength of units derived from tests on cube specimens cannot be used for access to Table 2. When designing masonry compressive strength to the withdrawn BS 5628-1, the manufacturer's declared compressive strength **must** be based on the results of **whole block testing**, since no allowance was included in BS 5628-1 for the effects of compression testing on smaller specimens.

Summary

- Masonry design to BS EN 1996-1-1
  Calculate fk based on fb. Fb may be derived from compression test results on cube or whole block specimens modified by the appropriate factors for moisture conditioning and shape of the test specimens, based on information provided by the masonry unit manufacturer. The factor for moisture conditioning is used to obtain the equivalent compressive strength relevant to the air-dry conditioning regime and the factor, d is the shape factor appropriate to the dimensions after surface preparation of the specimens tested. The relevant factors for moisture conditioning and shape factor for the UK are given in BS EN 772-1:2011, Table A1.
- Masonry design to BS 5628-1
  Calculate fk, based on the compressive strength of the masonry units declared by the masonry unit manufacturer and derived from test results on whole blocks **only**.

It is important to note that values of fk are not interchangeable between codes.

YOU NEED TO...

- Determine whether the design of masonry accords with BS EN 1996-1-1 or withdrawn BS 5628-1.
- Determine the value of fk, characteristic compressive strength of masonry, appropriate to the design code used (note that values of fk are not interchangeable between codes).
- Ensure that the calculated compressive strength of masonry units used is derived from compression testing of whole AAC units only, if the design is in accordance with BS 5628-1.
- Ensure that the normalised mean compressive strength of masonry units used is derived from the results of compression testing on cube or whole block specimens modified by appropriate factors for moisture conditioning and shape of the test specimens, based on information provided by the masonry unit manufacturer, if the design is in accordance with BS EN 1996-1-1.

REGULATION AND COMPLIANCE

CE marking for steelwork fabrications

Who should read this: Technical and construction directors and managers, architects, designers, manufacturers, specifiers, purchasers and site managers.

INTRODUCTION

The Construction Products Regulation (CPR) came in to force on 1 July 2013 and introduced legal obligations on the manufacturers, distributors and importers of construction products used in 'buildings and civil engineering works' in the EU. These obligations include CE marking construction products where they are covered by either a harmonised standard or European Technical Assessment (ETA). The types of buildings and civil engineering works covered by the CPR is very wide and includes domestic as well as industrial, commercial, office, health, educational, recreational and agricultural buildings.

This article considers CE marking requirements for steelwork fabrications.

REQUIREMENTS

The harmonised standard for fabricated structural steelwork, BS EN 1090-1, came into force on 1 July 2014, and manufacturers of fabricated products are required by law to CE mark their products according to this standard. This includes fabricated structural steelwork used in domestic buildings.

BS EN 1090-1 is closely linked to the execution standard for structural steelwork, BS EN 1090-2, and this latter standard requires whole structures, components and details to be classified in terms of 'Execution Class'. Execution Class is a relatively new concept and is used by designers/specifiers to define a set of quality and assurance controls for the fabrication process.

Execution Class is a design issue, and the design engineer who is either commissioned by the builder (purchaser) or manufacturer is responsible for specifying the Execution Classes for the structure as a whole, the components and the details they have designed.

There are four Execution Classes, ranging from EXC1 to EXC4. EXC1 is the lowest and is for structures where the consequences of failure are low, and EXC4 is the highest and applies to structures where the consequences of failures are high.

Factors affecting the derivation of the Execution Class are:

- Consequences Classes (BS EN 1990 Annex B Table B1 and BS EN 1991-1-7 Table A.1)
- Service Category (BS EN 1090-2 Table B.1)
- Production Category (BS EN 1090-2 Table B.2).

The Consequence Classes are CC1 to CC3 and correspond to low, medium and high consequence for loss of human life or economical, social or environmental consequences. The Service Categories are SC1 and SC2 and broadly apply to buildings designed mainly for static loads and those subject to dynamic or fatigue loads respectively. The Production Categories are either PC1 or PC2, covering, respectively, non-welded components of all grades of steel and welded components that are fabricated from steel grade products below S355 or welded components fabricated from steel grade products from S355 and above.

Table B.3 of BS EN 1090-2, which is in a matrix format, gives the Execution Class based on the relevant Consequence Class, Service Category and Production Category. It should be noted that Execution Class EXC2 will apply to the majority of the buildings as they fall under Consequence Class CC2, Service Category SC1, and the Execution Class is less sensitive to Production Category.

REQUIREMENTS (CONTINUED)

Only steelwork contractors with an Execution Class equal to or higher than that required for the structure should be considered as fabricators and erectors. A steelwork contractor's Factory Production Control (FPC) system will be established for a given Execution Class and will be assessed according to assessment and verification of constancy of performance system 2+, which requires a notified body to certify the company's FPC system. The certification process requires the notified body to carry out:

- an initial inspection of the manufacturing plant
- continuous surveillance of FPC system procedures.

If successful, the notified body will issue the steelwork contractor with the following two certificates:

- FPC certificate.
- Welding Certificate.

These two certificates allow the steelwork contractor to CE mark its fabricated steelwork.

All British Constructional Steelwork Association (BCSA) Member steelwork contractors have achieved the necessary certification for the appropriate Execution Class and fully comply with the requirements of the CPR for steelwork fabrication and on-site erection.

The client/main contractor will be responsible for appointing a steelwork contractor with an appropriate Execution Class for the project. The steelwork contractor should provide an FPC and, where appropriate, a welding certificate issued by a notified body. On completion of the work, the steelwork contractor must provide a Declaration of Performance (DoP) and the CE marking for the fabricated steelwork.

Detailed guidance on CE marking of steelwork fabrications and the responsibilities of the various parties involved in the process of manufacturing and procuring steel fabrications complying with the CPR can be found in a joint publication by Tata Steel and BCSA, *Steel Construction CE Marking*. This publication is free to download from **www.steelconstruction.info/.**

YOU NEED TO...

- Check the fabricator and the contractor can carry out work to the complexity level as determined by the Execution Class
- Alternatively, use a BCSA member who has the competency that matches the required Execution Class for the project.

GUIDANCE AND GOOD PRACTICE

Pre-start meetings and risk guides

Who should read this: Technical and construction directors and managers, site managers, architects and designers.

INTRODUCTION

Feedback from NHBC registered builders has highlighted that early identification of risks and issues helps them build compliant homes.

Pre-start site meetings provide builders and site personnel with the opportunity for early engagement with NHBC building inspectors. These meetings help to identify or confirm any specific risks associated with the site, along with any special inspection requirements or opportunities for additional support.

GUIDANCE

For every new site notified to NHBC, building inspectors will contact the site manager/builder to arrange a pre-start meeting. This meeting will be used to review the plans and drawings for the development and to discuss ground conditions, foundation proposals, types of construction and proposed materials.

Builders are encouraged to take this opportunity to seek advice and discuss any areas of concern regarding the proposed design, build and inspection requirements. Building inspectors will advise of any known risks associated with issues, including exposure and proposed construction types/materials, and discuss NHBC inspection requirements for the site. They will also look to identify any potential risk areas such as balconies, basements, parapet walls or render, and give appropriate advice.

The pre-start meeting may also highlight building control or engineering issues and facilitate engagement with our technical teams to enable early resolution.

NHBC will be producing a series of risk guides over the coming months. These guides will focus on those elements of construction with significant claims potential post-occupation, or a high frequency of reportable items during construction. They will identify known problem areas and give best practice guidance on how to ensure correct construction in accordance with NHBC Standards. NHBC building inspectors will be discussing applicable risk guides with the site team at the pre-start meeting, leaving a copy on site.

YOU NEED TO...

- Use pre-start meetings to help you and your inspector identify and resolve site-specific issues at the earliest opportunity.

For **technical advice and support**, call **01908 747384** or visit **www.nhbc.co.uk**

GUIDANCE AND GOOD PRACTICE

Provision of fire protection to proprietary dummy chimneys over party walls

Who should read this: Technical and construction directors and managers, architects, designers, manufacturers, specifiers, purchasers and site managers.

INTRODUCTION

Proprietary dummy chimneys have hollow cores and most have open bases. This article highlights the potential risk of fire spreading across separating walls via open-based chimneys.

GUIDANCE

Fire protection at the junction of a separating wall to a pitched roof is usually achieved by the provision of mineral quilt to fill any gaps between the wall, roof underlay and roof covering, across the full width of the wall. Where a dummy chimney sits over a party wall, it is essential that the fire protection is not compromised.

To prevent the spread of fire, the dummy chimney should be provided with a fire resistant base so as to achieve the required fire protection.

Any gaps between the base of the chimney and the top of the separating wall should be filled with a non-combustible material in a similar manner to the fire stopping provided between the party wall and roof covering.

One way of achieving this is to adopt the detail shown in Figure 1. It shows the typical fire stopping provided between the wall and roof covering continuing under the dummy chimney. It is important that the method of fire protection provided under the dummy chimney links fully with the fire stopping provided between the wall and roof covering. The secondary weatherproofing provided by the roof underlay should be maintained by either continuing the underlay under or dressing it around the chimney.

Most dummy chimney manufacturers can provide chimneys with fire resistant bases but, as a rule, these are not provided as standard, so it is important to request them.

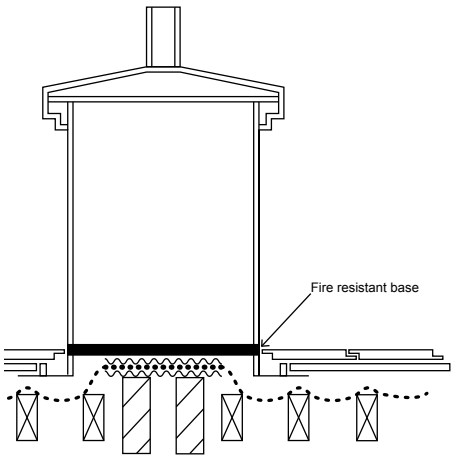

Fig. 1.

YOU NEED TO...

- Make sure you inform the manufacturer about the proposed location when ordering dummy chimneys. Where the chimney is to be installed over a party wall, ensure it is supplied with a fire resistant base or, alternatively, agree a satisfactory fire resistant infill detail that can be achieved by the installer on site.

For **technical advice and support**, call **01908 747384** or visit **www.nhbc.co.uk**

GUIDANCE AND GOOD PRACTICE

robustdetails® animated training videos

Who should read this: Technical managers, contracts managers, site supervisors and site operatives.

INTRODUCTION

Robust Details Limited has launched a series of animated training videos, showing the key features of each Robust Detail, the sequence of construction and how to ensure that separating walls and floors can be built reliably so as to meet the required acoustic standards.

GUIDANCE

We all know about the 'performance gap' – where the built construction in some way falls short of providing the intended and expected performance – and how this can affect occupier satisfaction. We also know there have been numerous studies and investigations into the causes and how these may be addressed.

After 10 years of Robust Details Limited inspecting, and monitoring the performance of plots registered to use the scheme, it has become overwhelmingly clear that where the **robust**details® requirements and specifications were properly followed, the expected performance was always delivered: the only time there was a gap between expected and measured performance was when there was a gap in material specification, workmanship and/or construction practices.

During the time that the Robust Details inspectors are on site, there has always been the opportunity for them to offer impromptu guidance, where necessary, to bring things back on course. This process of knowledge transfer was further enhanced at the beginning of 2009, when Robust Details Limited began facilitating more formal training on site, as suppliers of certain resilient systems were invited to give toolbox talks and demonstrations covering aspects essential to the correct installation of their specific materials.

Expanding on these initiatives, and following feedback from the industry, Robust Details Limited has recently commissioned a set of animations that chart the build process for the **robust**details® separating walls and floors, and the first batch is now available to view on the Robust Details website: www.robustdetails.com.

The animations reference the key specifications of the Robust Details constructions, including the correct material selection and dimensions, that are contained in the Robust Details Handbook; but with the help of the 'invisible man' operative, the animations have the extra benefit of being particularly suited to illustrating best practices. This not only helps to gain the most from the potential acoustic performance, but also shows how to avoid the pitfalls identified during the last 10 years' of surveillance.

Text is displayed to highlight the most important considerations at various points as the animated construction progresses; and a voice-over narration runs throughout the sequence, explaining the necessity behind these and other factors.

As well as the animations for the main Robust Details wall and floor types, there are links provided to take users to associated and supplementary mini-animations, such as: how to build timber joists into a masonry separating wall; and how best to treat a soil and vent pipe (SVP) as it penetrates a separating floor, to protect against flanking sound transmission.

Workmanship is a major factor when it comes to closing the acoustic performance gap; and, with the current upturn in the construction industry, this is a welcome tool for training new site staff who perhaps are not fully familiar with the **robust**details® requirements, enabling them to get it right, first time, on site.

These videos can be viewed on most PCs, tablets and smartphones, making them easily accessible for toolbox talks and for reference while actually 'doing the job'.

For **technical advice and support**, call **01908 747384** or visit **www.nhbc.co.uk**

GUIDANCE (CONTINUED)

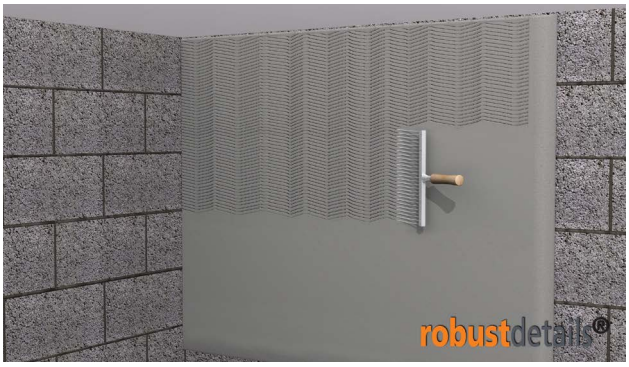

Examples of still images taken from sample animations

So, to summarise what the animations offer:

- Clear guidance, largely aimed at trades involved in the construction of Robust Details, but also for site managers, and possibly of interest to designers and/or specifiers. Also useful for inspectors to demonstrate the correct methods and for educational establishments to teach students.
- Knowledge transfer – getting the important things (about sound insulation) right.
- Lessons learnt from 10 years of **robust**details® in use – as established through surveillance.
- An alternative means of communicating messages through the increasing use of smartphones and tablets – and in 3D view format.
- Specific new-build information, but NOT to be taken as a stand-alone item – they must be used in conjunction with the full specifications in the Robust Details Handbook.
- Perhaps a more light-hearted visual treatment than the 'formal' Handbook approach.
- The ability to focus on key aspects – building in joist ends, FFTs and ceilings.
- A pointer to the way industry could close the 'performance gap'.

For further information on the animations or the **robust**details® scheme in general, please contact the Robust Details Technical Helpline at **technical@robustdetails.com**.

GUIDANCE AND GOOD PRACTICE

NHBC Foundation

Who should read this: Technical and construction directors and managers, architects, designers and site managers.

INTRODUCTION

Supporting the industry with high-quality research and practical guidance, all NHBC Foundation reports are available to download free of charge at www.nhbcfoundation.org.

Below are summaries of the latest publications, along with details of some of the ongoing research.

GUIDANCE

Improving the prospects for small house builders and developers NF57

Recently published research by the NHBC Foundation has identified serious barriers to growth for small house builders and developers in the UK.

Small house builders and developers have historically played a significant part in the UK economy. From 2000 to 2008, these smaller firms were building more than 50,000 new homes a year, between 25% and 30% of the national output. From 2008, they progressively declined in number – between 2008 and 2013, their numbers halved from an estimated 5,500 to just over 2,700 – and their contribution to annual output also halved, from 40,000 to just over 20,000 homes.

The report *Improving the prospects for small house builders and developers* (NF57) explores the business environment that small companies were experiencing in the first half of 2014. It surveyed nearly 500 small house builders and developers (those defined as building up to 100 new homes per year) to understand the main business challenges they faced, and what might be done to encourage growth.

The research, carried out with the assistance of the Home Builders Federation (HBF), the House Builders Association (HBA) and the Federation of Master Builders (FMB), highlights a number of rebalancing measures that would significantly improve matters for the smaller operators, including:

- availability of timely pre-planning advice and more rapid planning decisions
- improving the quality of communications from planning departments to small firms
- more flexible lending arrangements from banks, reflecting the practicalities of developing sites
- increasing the availability of small, stand-alone plots
- offering some land parcels for 1-10 homes on larger development sites.

To download the research report *Improving the prospects for small house builders and developers*, please visit **www.nhbcfoundation.org/**.

Part L 2013 – where to start (for England) NF58 and NF59

Complying with Part L – Conservation of fuel and power – is one of the most complex challenges faced by the house-building industry, so the NHBC Foundation has published two new guides to help house builders and designers understand what is now needed.

The guides cover the most common forms of construction in two separate publications:

- Part L 2013 – where to start: An introduction for house builders and designers – masonry construction (NF58).
- Part L 2013 – where to start: An introduction for house builders and designers – timber frame construction (NF59).

For **technical advice and support**, call **01908 747384** or visit **www.nhbc.co.uk**

GUIDANCE (CONTINUED)

Building on NHBC Foundation guidance to Part L, published in 2011, both guides provide greater detail on the topic of thermal bridging, such as the heat loss which occurs around window openings and at the junctions between building elements.

The guides provide examples of typical homes, outlining possible options for overall compliance with Part L and focusing on the new fabric performance standard and the ways in which this may be tackled by house builders.

For more information, and to download the Part L 2013 guides, please visit **www.nhbcfoundation.org/**.

Research projects currently under way

The following research projects are ongoing, with several due to be published in the next few months (please note, these are working titles and may change prior to publication).

Avoiding rubbish design: providing for bin storage on new housing developments

Accommodating bins acceptably is a significant design challenge for the modern home, particularly for terraced homes. This work is reviewing local authority policies on waste segregation, and how this impacts on storage requirements and risk of 'bin blight'. The work is reviewing successful bin storage approaches and will make recommendations on good design practice.

Improving recruitment of talented young people into the home-building industry

It is a concern that house building is failing to attract the most talented young people. This work is exploring the perceptions of house building among young people and, crucially, those who are advising them on possible careers (parents and careers advice professionals). It will inform the development of more effective recruitment strategies.

Homes through the decades

The output from this research will be an illustrated review of how housing has changed since Victorian times. It will chart the key drivers of change and the important advances in technologies and facilities, with an emphasis on what new homes offer today.

Housing Associations' experience of sustainable technologies

This work is investigating Housing Associations' experiences in the adoption and use of sustainable technologies, with a focus on low carbon energy and water saving systems. The research findings will be based on focus group and survey work and aims to encourage sharing of experience and, ultimately, better decision-making on choice of systems.

Guide to specifying lighting in new homes

Modern, well-specified lighting technology brings the opportunity for housing developers to reduce the costs associated with installing lighting in new homes while providing a better lighting solution, and this guide is designed to provide all the information housing developers will need in order to specify good quality domestic lighting schemes that are compliant with current Building Regulations.

YOU NEED TO...

- This article is for general interest. There are no actionable requirements, although readers are encouraged to note the findings of the reports.
- For more information, please visit **www.nhbcfoundation.org/research**.

GUIDANCE AND GOOD PRACTICE

Provision of weep holes and weep vents in masonry walls

Who should read this: Technical and construction directors and managers, architects, designers, specifiers, purchasers and site managers.

INTRODUCTION

In recent editions of *Technical Extra*, we've highlighted the damaging effect wind driven rain can have on properties if external cavity walls are not adequately drained. Previous articles have focused on the critical function of the cavity tray; here, we discuss the important role of the weep hole or vent.

GUIDANCE

Weep holes are provided to discharge any water that may enter a cavity wall safely to the outer face of the building. NHBC Standards refer to the provision of weep holes to drain the base of cavity walls, at intervals along continuous cavity trays, at stepped cavity trays and at cavity trays over openings.

As illustrated in NHBC Standards, in its simplest form, a weep hole can be an open brick perpend joint. Alternatively, a proprietary weep hole may be installed, and these often include baffles to stop the ingress of wind driven rain or large insects.

To be effective, the end of the weep hole within the cavity must be kept clear of any mortar droppings, particularly where there is a cavity tray directly behind. For this reason, the cavity end of a proprietary weep hole should be at least the size of a brick perpend joint, e.g. 65mm x 10mm. At the outer face of the wall, it is permissible for a proprietary weep hole to terminate with a smaller opening, provided this is large enough to discharge any water collected, safely, and is not blocked by any mortar bedding or pointing. Particular attention should be given to any extendable weep hole to ensure it protrudes sufficiently to discharge beyond the face of the wall and avoid being filled with mortar.

In certain locations, such as masonry cladding to timber framed walls, the weep hole will provide venting of the cavity and technically becomes a 'weep vent'. Weep vents may be an open brick perpend joint or a proprietary weep vent approximately 65mm x 10mm. A weep vent should be full size at both ends and throughout its length.

YOU NEED TO...

- Weep holes in cavity walls should be the equivalent of a full brick perpend joint, e.g. 65mm x 10mm where exposed within the cavity. The size of the discharge opening may be smaller, provided it is designed to discharge any water collected, safely. Weep vents should be the equivalent of a full brick perpend joint throughout their length.

For **technical advice and support**, call **01908 747384** or visit **www.nhbc.co.uk**

TECHNICAL NEWS

THE DATE FOR THE END OF THE PART L 2014 (ENGLAND) TRANSITIONAL PROVISIONS IS FAST APPROACHING

Builders who submitted sites to NHBC ahead of the implementation of Part L 2013 in England should note that the date by which a commencement should be recorded in order to ensure the site fully meets the transitional provisions is fast approaching.

To qualify to meet the transitional provisions put in place for Part L 2013 an initial notice, building notice or full plans submission must have been served before 6 April 2014 and work should have been commenced on site before 6 April 2015.

Where a site meets the transitional provisions, Part L 2013 will not apply. In DCLG's opinion, the commencement of work would usually be marked by work such as:

- excavation for strip or trench foundations or for pad footings
- digging out and preparation of ground for raft foundations
- vibroflotation (stone columns) piling, boring for piles or pile driving
- drainage work specific to the building(s) concerned.

DCLG considers that the following sorts of work would not be likely to constitute the commencement of work:

- Removal of vegetation, top soil or removal/treatment of contaminated soil.
- Demolition of any previous buildings on the site.
- Excavation of trial holes.
- Dynamic compaction.
- General site servicing works (e.g. roadways).

In some cases, applications will be in respect of a number of buildings on a site, for example, a number of houses. In such case, it is the commencement of work on the first of the buildings within the application which determines whether all the building work can take advantage of the transitional provisions, not each individual building.

Action: builders who have already submitted an initial notice and carried out designs to Part L 2010, but have not yet carried out a commencement on sites, should contact their NHBC building inspector as soon as possible to arrange for a suitable inspection to be carried out and recorded before 6 April 2015.

IMPLEMENTATION OF CHANGES TO BS 5534 – CODE OF PRACTICE FOR SLATING AND TILING FOR PITCHED ROOFS AND VERTICAL CLADDING

An article on the changes to BS 5534 (Slating and tiling for pitched roofs and vertical cladding – code of practice) appeared in NHBC *Technical Extra 15* at the end of October 2014. Builders and roofing contractors were advised to adopt the new BS 5534 requirements as soon as was practicable.

In practice, between now and the end of February 2015, sites could be working to both versions of BS 5534. Depending on the size of each phase of works, it may be that some roofs in a phased development may not have been fixed by the end of February 2015. Where a phase has been working to the old British Standard, but has not been fully fixed by the end of February 2015, it can be finished to the old BS 5534 requirements. However, to ensure the new requirements are adopted in a timely fashion, NHBC will apply a backstop of 1 July 2015, after which all roofs should be fixed in accordance with the revised BS 5534.

To this end, the following guidance will apply:

1) Roofing work already quoted and contracts agreed between the roofing contractor and main contractor can be completed under the old version of BS 5534.
2) Roofing work not yet quoted and no contracts agreed – to be completed under the revised version of BS 5534:2014.
3) All roofing works as at 1 July 2015, regardless of site size and number of phases – to be completed under the revised version of BS 5534:2014.

The above guidance is very much a backstop, and NHBC's approach is to encourage the adoption of the revised BS 5534 requirements at the earliest opportunity.

Action: follow the transitional guidance given above. Further information on the new requirements can be found in *Technical Extra 15*.

INFORMATION AND SUPPORT

UPCOMING TECHNICAL EVENTS

Building for tomorrow 2015

Attending a Building for tomorrow event is essential to help you keep on top of current industry challenges. With increasing pressure on resources, maintaining quality and customer satisfaction is becoming more demanding.

Technological advances in materials, changing technical requirements and NHBC's experiences from site will all help shape a number of presentations from industry experts. You will also have the chance to network with fellow industry professionals and meet the Building for tomorrow exhibitors

Full details of this years agenda are available at **www.nhbc.co.uk/bft.**

Date	Location
26 February 2015	Shendish Manor, Hemel Hempstead
5 March 2015	Thistle Haydock hotel, Haydock
10 March 2015	Leigh Court, Bristol
12 March 2015	Sandown Park Racecourse, Esher
17 March 2015	York Racecourse, York
24 March 2015	Westerwood Hotel, Cumbernauld
26 March 2015	Cambridge Belfry, Cambourne
14 April 2015	National Motorcycle Museum, Birmingham
16 April 2015	Hilton Belfast, Templepatrick

NHBC EXTRANET REPLACED BY NHBC PORTAL

Over the past few years, NHBC has been working on a new online website to replace our Extranet service. Customer feedback told us that we needed to find a much better and easier way for builders to work with us. So the NHBC Portal has been developed. Roll-out began in May 2014, and we have had universally positive reactions. As most Extranet users (over 2,500) have moved to this new free service, we have decided that the Extranet will be switched off very shortly.

If you want to know more about the NHBC Portal, there is a video on www.nhbc.co.uk/PortalLogin. The portal provides 24/7 access to key site information. You can:

- submit new sites via an intelligent Site Notification and Initial Notice (SNIN) form; it only takes a few minutes
- submit detailed plot information such as selling prices, fabrication types and contract prices; you can even do this straight after a SNIN is completed
- receive instant Warranty and Building Control quotes – no calling us for up-to-date quotes and waiting for them to be posted
- register all in one go; you can complete your SNIN, provide your plot registration information and obtain your quotes immediately – start to finish in only a few minutes
- keep an eye on outstanding technical conditions and reportable items – don't get caught out when it comes to finalling
- submit information to NHBC quickly and easily; upload files, such as plot maps, letters, spreadsheets, zips and even folders – with complete document visibility, you will never be left wondering whether you've sent that information
- view all your NHBC contacts in one place; never be left wondering who you need to call
- run reports on conditions, and reportable and builder responsible items across multiple sites, even across multiple companies if needed
- view and download *NHBC Technical Standards* (and even this *Technical Extra*) online
- download the Foundation Depth Calculator.

To get access to all these features, and to save yourself time and make working with NHBC so much easier, sign up today.

Go to **www.nhbc.co.uk/PortalLogin.**

INFORMATION AND SUPPORT

AIR-LEAKAGE PRE-COMPLETION TESTING

Part L of the Building Regulations sets the energy efficiency standards for new homes and requires that a sample of new homes on all developments is tested for air leakage (also known as air tightness, air permeability or air pressure testing).

In partnership with BSRIA, we offer a complete post-completion testing service in England and Wales.

BSRIA is UKAS accredited, ATTMA-accredited, and has the experience to help you on any project with:

- fast response and quick results – testing is arranged around your build schedule and you receive an immediate indication of test performance on site, with a full certificate/report sent electronically shortly afterwards
- expert remedial advice if your development fails any of the tests, helping you achieve compliance as quickly as possible – we will, whenever possible, undertake re-tests during the same visit to help you get the pass you need
- a complete compliance solution if you combine your air leakage testing with NHBC Building Control and our energy rating services – we will ensure swift communication between teams to clear outstanding technical conditions.

Visit **www.nhbc.co.uk/energy** for further information.

TRAINING – UNDERSTANDING WHAT PART L1A 2013 REALLY MEANS FOR YOU

NHBC is running a half-day Part L1a 2013 training course led by our consultants. It will give you an insight into the key changes since Part L1a 2010 and what they may mean for your specification.

Using worked examples and our extensive experience in Part L compliance, we will identify the potential fabric and services solutions required to provide a cost-effective compliance strategy.

Part L1a 2013 came in to force in April 2014, but a 12-month period to start on site was permitted to continue using Part L1a 2010. All sites started after April 2015 therefore need to be built using Part L1a 2013 regulations – this course will ensure that you understand the changes and what they mean to you.

Visit www.nhbc.co.uk/training for further information, including dates, venues and price.

TRAINING – FREE CONSTRUCTION (DESIGN AND MANAGEMENT) SEMINAR

The Construction (Design and Management) (CDM) Regulations are changing. From 6 April 2015, clients, designers and principal contractors will have to comply with new duties affecting projects and companies of all sizes.

The CDM Regulations fundamentally affect the way in which house-building projects are planned and managed. Understanding the changes is key to successful implementation.

NHBC is running a **free** two-hour seminar in partnership with the HBF to help you understand and prepare for these changes.

The seminar is aimed at NHBC registered builders and their designers; it is ideal for technical and construction teams involved in the management of the pre-construction phase, as well as specialist designers such as architects and engineers.

Visit **www.nhbc.co.uk/training** for further information, including dates, venues and price.

TRAINING – UNDERSTANDING CHAPTER 5.4 FOR TECHNICAL STAFF

Following the introduction of the new NHBC Standards Chapter 5.4 'Waterproofing of basements and other below ground structures', due to come into force later this year, NHBC is developing a suite of training for its technical and inspection teams.

All staff involved in the assessment of technical designs will be trained on the new Chapter between February and April 2015, with training for all building inspectors rolled out from September/October 2015.

Later in the year, we will be making this training available to our registered builders; for your technical staff and site managers. To register interest in this training and to find out costs, location and content, please email **training@nhbc.co.uk**.

Useful contacts for technical information and advice

NHBC technical advice and support

Tel: 01908 747384
Email: technical@nhbc.co.uk
Web: www.nhbc.co.uk/builders/technicaladviceandsupport

Technical Extra

Previous editions of *Technical Extra* are available on our website at www.nhbc.co.uk/Builders/ProductsandServices/TechnicalExtra/

NHBC Standards

Buy online at: www.nhbc.co.uk/nhbcshop/technicalstandards or access the new digital format Standards Plus via the NHBC Portal at: www.nhbc.co.uk/PortalLogin

Building Regulations

For guidance on issues relating to Building Regulations, please visit NHBC's TechZone at www.nhbc.co.uk/techzone

Building Control

For Building Control queries, please call 0844 633 1000 and ask for **'Building Control'**, or email buildingcontroladmin@nhbc.co.uk.

Engineering queries

For Engineering queries, please call 0844 633 1000 and ask for **'Engineering'**.

NHBC Foundation research

The NHBC Foundation facilitates research and shares relevant guidance and good practice with the house-building industry.

www.nhbcfoundation.org

Training

For information about training, please go to www.nhbc.co.uk/training, call 0844 633 1000 and ask for **'Training'**, or email training@nhbc.co.uk.

The Zero Carbon Hub

The UK Government has set out an ambitious plan for all new homes to be zero carbon from 2016. The Zero Carbon Hub helps you understand the challenges, issues and opportunities involved in developing, building and marketing your low and zero carbon homes.

www.zerocarbonhub.org

NHBC Clicks & Mortar e-newsletter

NHBC regularly distributes information on a range of industry topics, including new products and services, the building industry market, house-building news and house-building statistics. To receive this industry information, please register at:

www.nhbc.co.uk/newsandcomment/registerfore-news

General enquiries

For all other enquiries, including ordering products and services, please call 0844 633 1000, and ask for **'Sales'**.

NHBC is authorised by the Prudential Regulation Authority and regulated by the Financial Conduct Authority and the Prudential Regulation Authority.

NHBC is registered in England under company number 00320784. NHBC's registered address is NHBC House, Davy Avenue, Knowlhill, Milton Keynes, Bucks, MK5 8FP

This leaflet has been printed on material which is produced from well-managed forests and is fully recyclable and biodegradable, ECF (elemental chlorine free) and is made to ISO 14001 Environmental Certification.

NHBC, NHBC House,
Davy Avenue, Knowlhill,
Milton Keynes,
Bucks MK5 8FP
Tel: 0844 633 1000
Fax: 0844 633 0022
www.nhbc.co.uk

Raising Standards. Protecting Homeowners

HB2840 02/15