Technical Extra

April 2016 | Issue 20

In this issue:

NHBC

Raising Standards. Protecting Homeowners

Foreword

Welcome to Technical Extra 20

As this edition of Technical Extra goes to print, I've started to review the first summary details of claims received in 2015. More complete feedback will be included in the next edition of *Technical Extra*, but the headlines appear to be encouraging, indicating an improvement (reduction) in claims, particularly those related to pitched roofs.

In last year's 'Annual claims feedback' (*Technical Extra 18* – July 2015), we highlighted a net reduction in valid Buildmark warranty claims received by NHBC per 1,000 plots on cover. This trend has continued into 2015, where we've seen less than five valid claims per 1,000 plots on cover.

We've highlighted in the past that over half of NHBC's annual claims relate to pitched roofs, and the highest proportion of these issues relate to defective mortar. Many builders appear to have benefitted from a move to dry systems, with circa 90% of almost 3,500 sites surveyed in August 2015 using a dry ridge and over 60% dry verges - a significant increase since a similar survey was undertaken three years ago.

The other prominent area of the Standards where NHBC experiences claims in years 3–10 is superstructure; in particular, external walls. Over recent months, we've targeted the most common failures; those associated with DPCs and cavity trays. The external wall seminars we ran in autumn 2015 and spring 2016 have proved very popular; focusing on these key details, the seminars were particularly relevant for site managers.

Continuing our campaign to raise standards in external wall construction, this edition of *Technical Extra* highlights the development of a new Standards chapter focusing on render and rendering systems. The new chapter will provide improved guidance for the correct design and application of external render, including site-mixed, factory-made and proprietary rendering systems. It is anticipated that the new chapter will be published later in the year and become effective with Standards 2017.

This edition of *Technical Extra* also includes details of the proposed changes to NHBC Standards in relation to lateral restraint straps, and a follow-up to the article on suspended beam and block concrete floors published last year; this time, focusing on structural reinforcement of in-situ concrete toppings.

In Regulation and compliance we highlight changes to legislation affecting the installation of gas in apartment blocks. We also include details of advances in the site assessment, characterisation and design of ground gas protection measures.

Finally, in February, NHBC OnSite was launched, providing technical resource and career support for registered site managers. Further information is included in 'Information and support'. This resource is completely free; I'd encourage all site managers, assistants and trainees to visit **www.NHBCsitemanager.co.uk** and sign up.

Mark Jones
Head of House-Building Standards

NHBC STANDARDS

External render and its application

Who should read this: Technical and construction directors, architects, designers and site managers.

INTRODUCTION

In line with our commitment to provide clear and practical guidance to industry and to keep pace with change, NHBC Standards are continually reviewed and updated. Recent experience has identified a need for improved guidance for the correct design and application of external render, including site-mixed, factory-made and proprietary rendering systems.

REQUIREMENTS

Render and rendering systems come in a number of forms, ranging from traditional site-mixed sand and cement through to specialist innovative systems. The diverse range of rendering types all require different considerations in their design and application.

Following on from research undertaken in the wake of failures in external masonry walls, NHBC is introducing a range of initiatives to help bring about improvement in this sometimes complex area.

Whilst very useful guidance can be found in the existing NHBC Standards, manufacturers' design manuals, British Standards, such as BS EN 13914-1 *Design, preparation and application of external rendering and internal plastering-external rendering,* and a range of other authoritative documents, it is often unclear which guidance applies to the types of render typically used in the construction of new homes.

With key considerations for the design and application of render, including the mix design, backing to which the render is applied, accommodation of movement, exposure conditions of the site and weather conditions at the time of application (to name but a few), it is understandable why clear and easy-to-follow guidance is needed.

NHBC has started work on developing a new Standards chapter that will set technical benchmarks and be specifically aimed at providing clear guidance for the design, materials and application of render. The chapter will cover most of the common rendering types, such as factory-produced renders and site-mixed traditional renders, as well as rendering systems that are applied to board or insulation substrates.

A broad range of industry representatives have been assembled to assist and guide NHBC in the development of the new chapter, which is anticipated to be published later in the year and become effective with Standards 2017.

Applied correctly, render can provide a durable, functional and attractive finish to the façade of any building. In line with our 'raising standards' ethos, NHBC aims to help industry get it right, and by offering clear and pragmatic guidance, the new chapter will be a significant step in reducing technical risk.

YOU NEED TO...

- Note the content of this article and look out for further publications later in the year.
- Contact NHBC Standards and Technical department if you have any questions relating to rendering or the work to develop the new chapter.

For **technical advice and support**, call **01908 747384** or visit **www.nhbc.co.uk**

NHBC STANDARDS

Fixing of wall lateral restraint straps to trussed rafter roofs

Who should read this: Technical and construction directors and managers, trussed rafter roof installers, architects, designers, specifiers and purchasers.

INTRODUCTION

For some time, it has been relatively common practice for builders to fix wall lateral restraint straps (LRSs) at roof level to the trussed rafter longitudinal bracing members, although the details often used by builders do not accord with guidance offered in Building Regulations, NHBC Standards or other authoritative documents.

This article highlights situations where it might be considered acceptable to fix LRSs in this way and describes proposed amendments to NHBC Standards 2017 to accommodate an alternative fixing arrangement.

STANDARDS CHAPTER

Chapter 7.2 'Pitched roofs'

REQUIREMENTS

Evidence from an NHBC internal survey conducted in in August 2012 indicated that LRSs, used for tying walls to trussed rafter roofs, are not always fixed in the manner recommended in Building Regulations, NHBC Standards, Standards Extra 43 article on *'Gable walls – the importance of restraint'* (December 2008) or other authoritative documents. Frequently, builders fix LRSs to roof longitudinal bracing timbers rather than to noggings fitted tight between the trussed rafters at rafter and ceiling chord levels, as illustrated in the foregoing guidance documents.

Despite the emphasis placed on the importance of correctly fixing restraint straps in the Standards Extra 43 article, the results of the NHBC survey revealed that use of the longitudinal bracing system persists, particularly in England and Wales.

Although the practice does not necessarily result in any detrimental effects to restrained walls, it is difficult to prove the adequacy of the detail by calculation in compliance with British Standards. In 2015, therefore, NHBC initiated an investigation into the capacity of longitudinal roof bracing and, in particular, the fixings between the LRS and the bracing members to resist horizontal forces at roof level.

Investigation and testing

Trussed rafter roof bracing systems are designed to provide adequate stability to the entire roof structure and it is recognised that, providing the straps are located at suitable positions and centres to accommodate the requirements for wall restraint, the longitudinal bracing members, generally comprising 25mm x 100mm sawn timber, together with their fixings to the trussed rafters, should be adequate to transfer the forces from the restraint straps to the roof construction.

A programme of testing was undertaken on sample assemblies comprising standard 30mm x 5.0mm thick x 1,200mm long steel restraint straps fixed to lengths of 25mm x 100mm sawn timber members supplied for bracing timber to trussed rafter roofs. Tests were undertaken on a range of fabrications using different quantities of 4mm screw fixings in order to determine a suitable arrangement to resist the test tensile force applied to the samples.

REQUIREMENTS (CONTINUED)

A tensile capacity of 8.0kN was used as the target for the test samples, as this value is given in the UK National Annex to BS EN 845-1:2013 as the minimum declared tensile load capacity for tension straps that provide an equivalent performance to the prescriptive 30mm x 5mm LRS. Tension straps of 30mm x 5mm are accepted by NHBC Standards Chapter 7.2 and Building Regulations for provision of lateral restraint on three storey residential construction.

The test results indicated that eight 25mm x 4mm steel screws evenly distributed along the length of a standard 30mm x 5mm steel strap x 1,200mm long would adequately resist the test tensile force when fixed to 100mm x 25mm timber longitudinal bracing members.

Optional acceptable details for fixing LRSs to trussed rafter roof construction

NHBC will accept traditional steel LRSs (30mm x 5.0mm thick x 1,200mm long) fixed to the roof construction by one of the following optional methods:

- Option 1 – LRS may be fixed to horizontal noggings fitted tight between trussed rafters and packed between the last rafter and the wall, using four 50mm minimum x 4mm steel screws or four 75mm x 4mm (8SWG) round nails, with one fixing in the third rafter as shown below (clause 7.2.8, Figure 1).
- Option 2 – LRS may be fixed to the 100mm face of 100mm x 25mm timber longitudinal bracing members using eight 25mm x 4mm steel screws evenly distributed along the length of a standard 30mm x 5mm steel strap x 1,200mm long, as shown below (clause 7.2.8, Figure 2 and clause 7.2.9).

- Option 3 – as an alternative to option 2, and where the position of the strap does not coincide with a longitudinal binder the LRS may be fixed to the 100mm face of short lengths of 100mm x 25mm timber members, which are themselves fixed over four trusses, nailed in accordance with clause 7.2.9 and fitted tight to the face of the block inner leaf.

It is intended that NHBC Standards Chapter 7.2 will be revised for the 2017 edition to permit the foregoing alternative fixing arrangements for LRSs to the roof construction. The proposed draft revision to Chapter 7.2 is shown below.

Proprietary LRSs

Where proprietary LRSs that have a thickness less than 5.0mm are proposed, the foregoing options will be acceptable only when the strap is assessed in accordance with Technical Requirement R3 and the fixing arrangement complies with the manufacturers' requirements.

The restraint clause (7.2.8) in NHBC Standards 2017 will be amended to say:

Adequate restraint shall be provided to support the structure, distribute roof loads and prevent wind uplift. Strapping shall be of adequate strength and durability, and fixed using appropriate fixings.

Restraint straps, or a restraining form of gable ladder, should be used where required to provide stability to walls, and installed in accordance with the design.

LRSs should be located:

- for homes up to and including three storeys (two storeys in Scotland), at a maximum spacing of 2m
- for homes four storeys or over, fixed at a maximum spacing of 1.25m.

LRSs should be fixed to the roof structure by either:

- fixing to solid noggings using four 50mm minimum x 4mm steel screws or four 75mm x 4mm (8SWG) round nails, with one fixing in the third rafter (Figure 1), or
- fixing to longitudinal bracing members using eight 25mm x 4mm steel screws evenly distributed along the length of the strap (figure 2) (additionally, 100mm x 25mm timber members, fixed over four trusses and nailed in accordance with clause 7.2.9, can be used where the position of the strap does not coincide with a longitudinal binder).

REQUIREMENTS (CONTINUED)

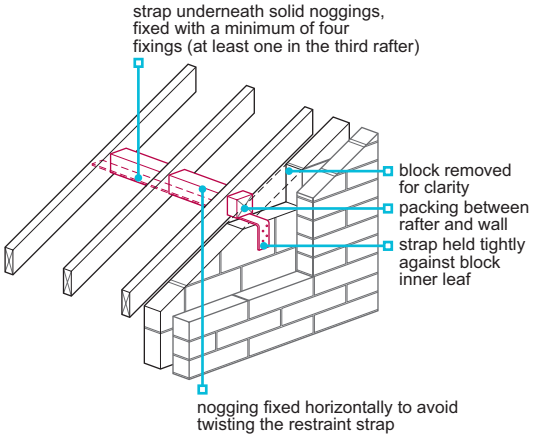

Figure 1

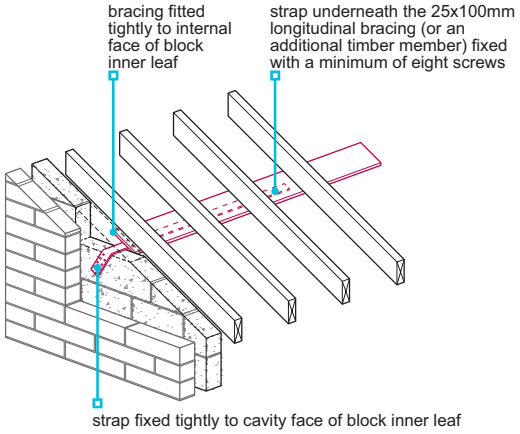

Figure 2

LRSs should be:

- ordered and supplied according to the design, i.e. the correct length and number of bends and twists
- in accordance with Technical Requirement R3
- provided at rafter level on gable walls, where the home is of masonry construction (larger or separating walls may require restraint at ceiling level)
- protected against corrosion in accordance with BS EN 845 - Tables A1 and A2 (sheradised straps or fixings are not acceptable in Northern Ireland and the Isle of Man)
- of sufficient length to be fixed to a minimum of three trusses
- a minimum size of 30mm x 5mm and have a minimum anchorage downturn of 100mm or propriatory straps installed in acordance with the manufacturer's recommendations
- fixed with the downturn on a substantial piece of blockwork, preferably fitted over the centre of an uncut block
- in accordance with BS EN 1995-1-1, when the home is of a timber frame construction.

In framed roofs, as an alternative, purlins and pole plates can be used to provide restraint where the timber abuts a gable construction. Where purlins are used to provide restraint, the maximum permissible spacing is 2m, unless the design shows otherwise.

Gable ladders can be used to provide restraint to the external wall where:

- there is blocking between the last trussed rafter and the inner leaf (maximum 2m spacing)
- the soffit board is cut carefully and then fixed securely to restrain the outer leaf.

As a transitional measure prior to the implementation of the NHBC Standards 2017, the following will apply:

Where lateral restraint straps (LRS) are fixed to longitudinal bracing, or fixed to additional 100mm x 25mm timbers as described in this article, Building Inspectors will check to see if the fixing details are in accordance with the new guidance i.e. 8 screw fixings evenly distributed along the length of the strap etc. Where they are not, an Observation will be recorded and entered into the Site Record book to assist in future compliance.

YOU NEED TO...

- Be aware of the proposed revision to Chapter 7.2 with respect to the fixing of LRSs at roof level.
- Contact NHBC, should you require further advice.

For **technical advice and support**, call **01908 747384** or visit **www.nhbc.co.uk**

REGULATION AND COMPLIANCE

Installation of gas in apartment blocks

Who should read this: Technical and construction directors and managers, architects, designers and site managers.

INTRODUCTION

BS 6891 *'Specification for the installation and maintenance of low pressure gas installation pipework of up to 35mm (R11/4) on premises'* has recently been revised and should be taken into account at an early stage when designing gas installations in domestic buildings.

REQUIREMENTS

The revision of BS 6891 became effective from 30 November 2015; it replaced BS 6891 2005+A2 2008. The standard has undergone a major revision and now includes guidance on the design, installation and use of both natural gas and liquid petroleum gas, which was previously covered in BS 5482-1. Whilst BS 6891 applies to all domestic properties, many of the revisions particularly relate to apartment blocks. The main changes to the design and installation of gas services are as follows:

- A new definition for 'protected areas'.
- Clarification on the types of gas pipe permitted in protected areas.
- Clarification on the ventilation requirements for pipework in protected areas.
- New details on how to install gas pipes within compartment floors, including suspended ceilings.
- Clearer details on how to install gas pipes behind drylining and the use of metal protection plates.
- The introduction of requirements on the design and installation of LPG.
- Introduction of a height for accessibility of additional emergency control valves.
- Clarification on sealing of gas pipes passing through external walls and meter cabinets.
- Details on running pipes in joisted floors, including solid timber and engineered timber and metal joists.
- Ventilation requirements for gas pipes in pitched roof voids.

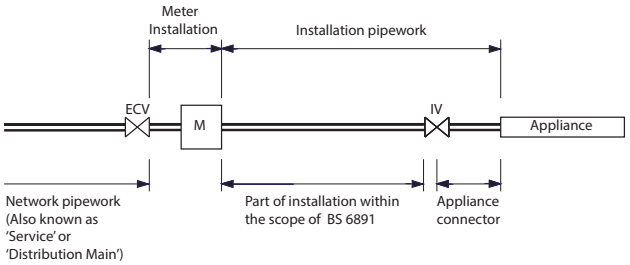

NATURAL GAS INSTALLATION

ECV = Emergency control valve
IV = Appliance isolation valve

The new definition for 'protected areas' in blocks of apartments clarifies the areas where special requirements regarding ventilation and fire protection apply. The revision has also clarified the types of gas pipe permitted for use within protected areas. More detailed explanation is given to where gas pipes may need to be contained within ducts and where they can be vented directly into rooms or communal areas. These requirements ensure the safe dispersal of any gas leaks within both private and communal areas; as explained in the standard, this can vary depending on the type of gas pipe selected and its method of installation.

The revision now illustrates methods for installing gas pipes in compartment floors, and further requirements and minor changes have also been made to the installation of gas pipes in walls and framed structures. These include the use of metal protection plates to some types of gas pipes when located directly behind plasterboard wall finishes and the use of sealants to provide gas tight construction.

For **Building Regulations advice and support**, call **0344 633 1000** and ask for **'Building Control'** or visit **www.nhbc.co.uk/bc**

REQUIREMENTS (CONTINUED)

The scope of BS 6891 covers the installation pipework between the gas meter and the isolation valve on appliances (see diagram). Where the gas meters are located outside the building or within a meter store attached to or within the building, the installation pipework for each individual apartment may run through both communal and private areas, and the appropriate ventilation and fire-proofing requirements, as described in the standard, will need to be included.

Where gas meters are located within the building, for example, next to the apartment entrances or within the individual apartments , the pipework upstream of the meter installation is part of the 'network' (see diagram). Pipework forming the network is covered by the requirements set out in IGEM/G/5 *'Gas in multi-occupancy buildings'* by the Institution of Gas Engineers and Managers. Although there are many similarities between the requirements set out in BS 6891 and IGEM/G/5, there are some differences regarding the type of pipework allowed in communal areas and the ways in which the ventilation requirements can be met. Therefore, when gas meters are located within the building, both BS 6891 and IGEM/G/5 requirements will apply.

YOU NEED TO...

- Consider the requirements of BS 6891 and IGEM/G/5 (where applicable) early in the design of the building to ensure you incorporate the necessary ducting and ventilation requirements.
- Ensure anyone working on your sites affected by BS 6891, including those related to relevant competent persons schemes, are fully aware of the changes and their implications.
- Contact NHBC Standards and Technical for further advice if you have any queries regarding the principles related to the incorporation of gas supplies within blocks of apartments.

GUIDANCE AND GOOD PRACTICE

Ground gas update – site assessment, characterisation and design of gas protection measures

Who should read this: Technical and construction directors, architects, designers, consultants and site managers

INTRODUCTION

In 2007, NHBC published technical guidance for low-rise residential developments on sites affected by ground gases. The document, entitled *'Guidance on evaluation of development proposals on sites where methane and carbon dioxide are present'*, included a simple multi stage classification method for low-rise housing, commonly referred to as the Traffic Light system.

The fundamental guidance offered in this document remains applicable but, since its publication, there have been a number of advances in knowledge, including guidance on alternative approaches for characterising gas regimes and updated advice on the design of measures to deal with gas risks.

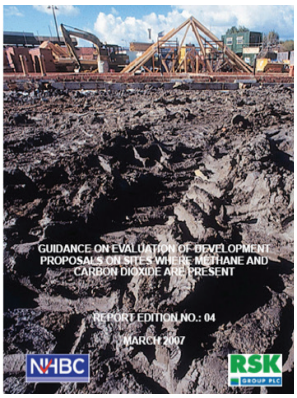

GUIDANCE

In advance of any update to the NHBC's Traffic Light guidance, this article provides an introduction to the most significant recent publications on ground gases:

Characterisation of gas risks without gas monitoring on low-risk sites

In November 2012, Contaminated Land: Applications in Real Environments (CL:AIRE) published a research bulletin (*RB17 – A pragmatic approach to ground gas risk assessment*) which described an alternative approach to ground gas risk assessment. It details circumstances when measurement of ground gas in monitoring wells may not provide the most suitable indication of the likely hazard it may pose to development.

The suggested approach allows the likely gas generation from an on-site source to be estimated based on a comprehensive desk study and conceptual site model, adequate site investigation data extending beyond any made ground and appropriate laboratory testing of soils, which must include the total organic content in order to determine whether any organic materials present pose a risk of ground gas generation.

This approach is restricted to low-risk sites defined as 'sites where the conceptual model has not identified any significant potential sources of ground gas, or gas protection is to be provided on sites where small volumes of gas may be generated'. This approach cannot be used for:

- assessing sites in areas of shallow coal workings
- sites with off-site gas sources
- materials associated with active or recent waste disposal sites.

Users should also be aware of the published limiting values based on the thickness and organic content of made ground.

For **technical advice and support**, call **01908 747384** or visit **www.nhbc.co.uk**

GUIDANCE (CONTINUED)

Commentary

- NHBC considers that the RB17 approach can be used as a reasonable alternative approach to ground gas risk assessment, but it should only be adopted where a comprehensive desk-based review has been implemented and where a low gas risk situation has been determined.
- This alternative approach can offer cost and time benefits in comparison with traditional gas monitoring surveys; however, the requirements of the approach must be fully met, and users must be conversant with the publication content and aware of the limitations and/or restrictions for its use.
- Users may find useful advice for defining the generation risk potential of a gas source and for determining the appropriate level of gas assessment and monitoring requirements in the British Standards publication (BS 8576:2013 *'Guidance on investigations for ground gas. Permanent gases and VOCs'*).

Verifying gas protection measures

Authoritative guidance relating to verification of gas protection systems was published in 2014 by CIRIA – (Report C735) entitled *'Good Practice and verification of protection systems for buildings against hazardous ground gases'*. The report offers comprehensive guidance on the approach for verification of gas protection systems and describes how it should be reported.

The guidance details that a verification plan or approach must be specific, based on the site-specific design and assessment of risk (risk-based approach), and well-informed and defendable. With respect to the team responsible for the design, installation and verification process, the following points are made:

Designer – must consider the site-specific gas regime, the number of buildings and construction period, the complexity of the design and the experience of the work force.

Verifier – to avoid conflict of interest reports by suppliers and installers. Additionally, gas protection systems address more than gas membranes, and verification could include requirement for inspection of ventilation solutions or practices of the follow-on trades.

Installer – the importance of an appropriately experienced, trained and qualified workforce for the installation of gas protection measures is recognised. The report suggests Construction Skills Level 2 NVQ Diploma as one example of a suitable qualification as a measure of installer competence.

The report reiterates that integrity testing is not a substitute for well-designed gas protection measures, but acknowledges their place in the verification process for offering necessary reassurance of the quality of workmanship for gas membrane installations, in conjunction with visual inspection. The report details the advantages and disadvantages of commonly available techniques and emphasises that different methods have different limitations.

Commentary

- NHBC supports guidance presented in this CIRIA publication which assists practitioners in demonstrating that risks have been appropriately managed.
- Whilst robust site characterisation is required to design gas protection measures, designers must have an understanding of building-related influences, as these significantly govern the design and construction options for gas protection measures.

GUIDANCE (CONTINUED)

- Installation of gas protection measures should be executed to National Occupational Standards (VR612 and 613). Advice on design and construction watch points is offered in BRE 414 (2001) *'Protection measures for housing on gas-contaminated land'*.
- Where gas protection measures are required, verification evidence should be considered at the design stage and will be requested by NHBC for Amber 2 (or similar) gas regime sites. NHBC strongly recommends that verification plans are discussed in advance of works and that any specific requirements, as set out under planning, are also considered.
- Practitioners should be aware that satisfying verification requirements after construction is extremely difficult and often more costly, and can be disruptive.

British Standard BS 8485:2015 'Code of practice for the design of protective measures for methane and carbon dioxide ground gases for new buildings'

This British Standard Code of Practice provides an updated standardised UK approach which can be used to demonstrate compliance with Building Regulations. The 2015 revision came into effect on 30th June 2015 and supersedes the 2007 publication. Practitioners should be aware that the revisions were substantial and introduced a number of important changes, principally;

- More detailed recommendations are provided on interpretation of gas monitoring data and provides advice on how to determine the representative gas screening value (GSV) for the site (or an assigned zone). A method of site characterisation without gas monitoring data (based on CL:AIRE RB17) is also included.
- The GSV is used to categorise the gas hazard potential of the site and utilises a Characteristic Situation system. The report recognises that alternative classification systems, such as NHBC's Traffic Light system, could be used.
- The Characteristic Situation system defines the minimum level of protection required by allocation of a required gas protection score, based on building type. The designer is required to achieve the score by selection from a combination of two or more of the types of protection measures of structural barriers, ventilation and gas resistant barriers.
- For each type of protection, there are a number of options, which are assigned different points depending upon their assigned contribution to the end solution.
- There are now expectations for the reporting of gas protection measures at the design, installation and post-construction (verification) stages.

A significant change is that the British Standard only offers definitive solution design advice where a practitioner has used the Characteristic Situation approach to assess the gas risks posed on a site. In relation to NHBC guidance (the Traffic Light system), the standard states that: 'The NHBC system typically applies to residential dwellings (type A buildings) with clear void ventilation. The design choice variables are limited to decisions relating to the membrane specification and verification recommendations. Designers using this system would need to refer to the NHBC guidance to assess compliance for specific recommendation'.

- NHBC supports the revised British Standard Code of Practice, which provides a standardised UK approach that can be used to demonstrate compliance with Building Regulations.
- The NHBC Traffic Light guidance can still be used where the development proposals are based on the 'typical house' used in the modelling for the traffic light classification system. A typical house is defined as a house (up to three storeys) with <100m^2 footprint and minimum 150mm depth clear ventilated void achieving sub-slab ventilation of one complete air exchange per day. Figure 1 details the model house assumptions for the Traffic Light guidance.

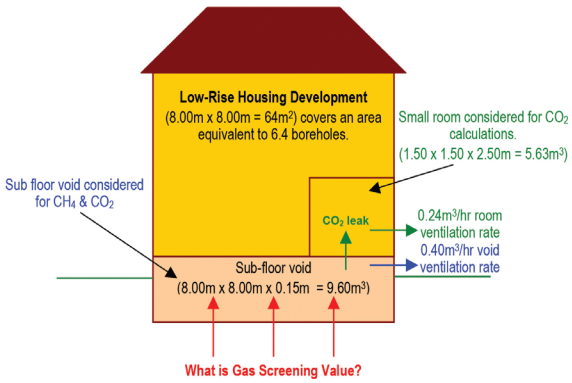

Figure 1: Model residential property developed for calculated maximum permitted gas concentration within the subfloor void.

GUIDANCE (CONTINUED)

- For a Traffic Light classification of Amber 1, it should not be plausible for there to be a significant gas risk to end users (as long as the development compares with the model assumptions), as the venting solution does not permit accumulation of gas concentrations at unsafe levels at the critical point of concern. On this basis, third-party verification of the installed gas membranes would not normally be required by NHBC for Amber 1 sites.
- For a Traffic Light classification of Amber 2, greater reliance is placed on the membrane integrity. Third-party verification would be required.
- For developments where the Characteristic Situation is applicable, the BS8485 scoring system requirements should be adopted.

NHBC expectations for verification to satisfy the Traffic Light gas regime classifications are as detailed in Table 1 below:

Table 1: Typical NHBC expectations and verification requirements

Gas regime	Minimum gas protection expectations	Verification or information requirements
Green	N/A – but need to comply with BR211 radon requirements, where applicable	
Amber 1	Ventilation – subfloor venting to achieve at least one air exchange per day (minimum 150mm void height; 1500mm^2/m air vent opening or 500mm^2/m^2 floor area spaced at not more than 2m centres on at least two opposing sides). Membrane – must be suitable for purpose. Membrane installation/design - to achieve complete integrity across entire building footprint. Penetrations and joints sealed.	Construction drawings – showing position of membrane; sealing details and ventilation points to be provided. Membrane specification – technical data sheet(s) for gas membrane (including gas permeability data) to be provided. Installation – photographic evidence of installed membrane may be requested.
Amber 2	Ventilation – subfloor venting to achieve at least one air exchange per day. Membrane – must be suitable for purpose (criterion detailed in BS8485 clause 7.2.4). Membrane installation and design to achieve complete integrity across entire building footprint. Penetrations and joints sealed. Installer – installers must be experienced and appropriately trained and/or qualified.	Construction drawings showing position of membrane, sealing details and ventilation points to be provided. Membrane specification – technical data sheet(s) for gas membrane (including gas permeability data) to be provided. Installation – third-party verification report with supporting evidence to be included (i.e. photographic evidence and certificates of conformity, observations relating to sealing, location of ventilators and standards of installation). Integrity testing – may be requested; testing plan to be agreed in advance.
Red	Standard residential housing is not generally acceptable without further ground gas risk assessment and/or possible remedial mitigation measures to reduce or remove the source of the ground gases.	

GUIDANCE (CONTINUED)

YOU NEED TO...

- Be aware that there have been a number of recent UK publications offering an alternative approaches to ground gas risk assessment and improved advice for the design and verification of measures to deal with gas risks.
- Practitioners undertaking gas surveys and assessing the risks should be conversant with updated guidance.
- Robust site characterisation is required to design gas protection measures, but designers must also have an understanding of building-related influences, as these significantly govern design and construction options for gas protection measures.
- Gas protection design, installation approach and verification requirements should be agreed with NHBC in advance of works, as satisfying requirements after construction is extremely difficult and often more costly, and can be disruptive.
- Specific requirements relating to gas protection measures may be applied under planning and must also be considered.
- The NHBC Traffic Light guidance can be used where the development proposals are based on the 'typical house' used for modelling in the traffic light classification system.
- Verification evidence will be requested for gas regimes at Amber 2. For developments where the Characteristic Situation is applicable, the BS8485 scoring system requirements should be adopted, and verification evidence could be required for gas regimes at CS2 or above.

GUIDANCE AND GOOD PRACTICE

Structural reinforced in-situ concrete toppings for use with beam and block suspended ground floors in residential construction

Who should read this: Technical and construction directors and managers, architects, designers, manufacturers and concrete producers, specifiers and purchasers.

INTRODUCTION

This article draws attention to the use of fibre reinforcement for structural in-situ concrete toppings used with suspended beam and block ground floor construction in residential properties. It should be read in conjunction with the previous article *'Suspended beam and block concrete floors – guidance on selection of products and materials'* TE15, October 2014.

Some types of fibre reinforcement may be acceptable as a replacement for welded steel mesh reinforcement in a structural in-situ concrete topping when used in conjunction with concrete self-bearing beams and expanded polystyrene (EPS) blocks of type R1 resistance classification for residential suspended beam and block floor construction. However, please be aware that NHBC will not accept the use of Class I synthetic polymer fibres (microfibres) in these situations.

GUIDANCE

This article is restricted to suspended beam and block floors for residential construction using self-bearing reinforced concrete beams, EPS blocks of type R1 resistance and structural in-situ reinforced concrete topping.

The harmonised standard BS EN 15037 *'Precast concrete products – Beam-and-block floor systems'* (parts 1-5) provides performance criteria and evaluation of conformity requirements for the components that together comprise suspended beam and block floor systems. Manufacturers and designers of residential suspended beam and block floor construction should be fully conversant with the requirements of all parts of BS EN 15037 and, in particular:

- 'Part 1: Beams' – reinforced concrete beam and block classifications, floor typologies (Annex B) and design philosophies of floor systems (Annex E)
- 'Part 4: Expanded polystyrene blocks – basic performance criteria for EPS blocks that may be used in conjunction with precast concrete beams.

Although this standard provides guidance on beam and block types in various combinations, it does not include the combination that is frequently used in residential suspended ground floors, i.e. self-bearing beams in conjunction with R1 type EPS blocks.

Components for use in beam and block suspended ground floor construction with structural in-situ concrete topping

This article is limited to beam and block floor constructions comprising the following components:

Self-bearing beams (BS EN 15037-1) – reinforced or pre-stressed concrete beams which provide the final strength of the floor independent of any other constituent part of the system, in order to support floor loads. Neither the blocks nor the cast in-situ concrete topping are used compositely with the beams to provide the compression flange of the finished floor system.

EPS blocks type R1 resistance classification (BS EN 15047-4) – blocks that perform no mechanical function in the final floor system, but provide thermal

For **technical advice and support**, call **01908 747384** or visit **www.nhbc.co.uk**

GUIDANCE (CONTINUED)

insulation to the finished floor and will act as formwork during the construction of the floor. The blocks are capable of resisting temporary actions associated with construction activities, but do not have sufficient capacity to resist long-term loads, such as self-weight, imposed loads and accidental actions for residential situations, in accordance with BS EN 1991-1-1.

Structural in-situ reinforced concrete topping – required to complete the floor system, the topping must be capable of supporting long-term loads and of spanning between the concrete self-bearing beams. The concrete topping may be designed to BS EN 1992-1-1 for concrete grade and reinforcement requirements when steel reinforcement in the form of bars or welded mesh to BS 4483:2005 *'Steel fabric for the reinforcement of concrete – Specification'* is used.

Alternatively, in situations where restrictions are imposed on beam spans, dead and live floor loads and design moments (refer to BS EN 15037-1), it may be acceptable for welded mesh reinforcement to be replaced by reinforcing fibres. Currently, there is no British Standard or authoritative guidance that provides verified common structural design rules for fibre reinforced concrete used as a structural topping to beam and block floors. Justification of suitability may be demonstrated by load testing of floor assemblies. Your attention is drawn to the restrictions that NHBC places on the use of fibre reinforcement as noted in the table below.

Table 1: NHBC restrictions on use of fibre reinforcement as a replacement to welded steel mesh

Fibre reinforcement type and relevant British Standard	Restrictions on use
Steel fibres in accordance with BS EN 14889-1:2006 *'Fibres for concrete. Steel fibres. Definitions, specifications and conformity'*.	The fibres should be suitable for structural use in concrete (determined in accordance with EN 14845 and EN 14651). The structural capacity of the concrete topping should be verified through appropriate testing by an independent third-party assessor. Fibres must be used in accordance with the manufacturer's recommendations and in compliance with the flooring product/system third-party accreditation certificate.
Class II synthetic polymer fibres (macro-synthetic fibres >0.3mm dia) in accordance with BS EN 14889-2:2006 *'Fibres for concrete. Polymer fibres. Definitions, specifications and conformity'*.	
Class I synthetic polymer fibres (micro synthetic fibres <0.3mm dia). There is no standard that covers the use of Class I fibres for use as structural reinforcement in in-situ concrete slabs.	Although micro fibres may help to enhance certain properties of hardened concrete (e.g. reducing plastic shrinkage cracking, reducing plastic settlement and increasing impact resistance), there is no evidence that micro fibres will provide the increase in residual (post-cracking) flexural strength required in structural concrete topping. NHBC does not accept the use of Class I synthetic polymer fibres as a replacement for welded steel mesh reinforcement in a structural in-situ suspended concrete topping when used in conjunction with self-bearing beams and EPS blocks of type R1 resistance classification in residential suspended beam and block floor construction.

GUIDANCE (CONTINUED)

Summary

The use of self-bearing precast concrete beams with EPS blocks type R1 is not specifically covered by BS EN 15037.

- For residential purposes only, NHBC will accept Type R1 classification EPS blocks used in conjunction with self-bearing beams and cast in-situ structural concrete topping for suspended ground floor construction, provided that the reinforcement for the concrete topping consists of welded steel mesh to BS 4483:2005 and has been verified by calculation to BS EN 1992-1-1.
- Alternatively, welded steel mesh reinforcement may be replaced with either Class II synthetic polymer fibres or steel fibres in residential suspended ground floor construction, providing that:
  - the fibres are suitable for structural use in concrete in compliance with EN 14845 and EN 14651, and are used in accordance with the manufacturers' recommendations
  - the structural capacity of the complete structural floor system (beams and concrete topping) is verified by an appropriate independent technical approval authority in accordance with NHBC Standards Technical Requirement R3; verification the form of load testing of the structural assembly (reinforced concrete beams and structural in-situ reinforced concrete topping) may be required (details to be agreed with NHBC prior to testing).
- NHBC does not accept the use of Class I synthetic polymer fibres as a replacement for welded steel mesh reinforcement in a structural in-situ concrete topping when used in conjunction with self-bearing beams and EPS blocks of type R1 resistance classification in residential suspended beam and block floor construction.

The guidance contained in this edition of *Technical Extra* reinforces the guidance already given in *Technical Extra 15* dated October 2014, and in particular that NHBC do not accept the use of Class 1 synthetic polymer fibres (micro fibres) in structural toppings as a replacement for welded steel mesh reinforcement. Where the use of micro fibres is observed, Building Inspectors will record a Reportable Item (RI) and rectification works will be required, unless justification of the design and construction has previously been agreed in writing with NHBC.

YOU NEED TO...

- Select the appropriate types of pre-cast concrete beam and block to suit the structural and thermal requirements of the suspended floor construction and ensure that the beam type is compatible with the block type specified, in accordance with BS EN 15037, Parts 1 to 4 as appropriate.
- Ensure that the design of the concrete topping is structurally suitable for use with the beam and block system specified.
- For residential construction only, and where the floor system comprises self-bearing beams used in conjunction with R1 type EPS blocks, follow the guidance given in this article for structural topping reinforced with welded steel mesh. Ensure that the design of the whole floor construction fulfils the structural requirements for its position in the building in accordance with BS EN 1992-1-1.
- Be aware of NHBC restrictions on use of possible alternatives to welded steel mesh reinforcement for structural concrete toppings (e.g. steel fibres and Class II synthetic polymer fibres and that NHBC does not accept the use of Class I synthetic polymer fibres as replacement for welded steel mesh reinforcement in a structural in-situ concrete topping.
- Ensure that all elements of the floor construction are installed in accordance with the manufacturers' instructions and technical information.

For **technical advice and support**, call **01908 747384** or visit **www.nhbc.co.uk**

GUIDANCE AND GOOD PRACTICE

NHBC Foundation

Who should read this: Technical and construction directors and managers, architects, designers and site managers.

INTRODUCTION

Supporting the industry with high-quality research and practical guidance, all NHBC Foundation reports are available to download free of charge at **www.nhbcfoundation.org**.

Here are summaries of the latest publications.

GUIDANCE

Tenure integration in housing developments: A literature review NF66

The NHBC Foundation, in collaboration with the Homes and Communities Agency, commissioned this review of existing literature to explore issues surrounding tenure integration in new housing developments. The review considers the success of the various approaches to locating and distributing social housing in mixed-tenure developments, such as 'pepper-potting', 'segmenting' and 'segregating'.

The research shows:

- Mixed tenure is part of UK life, and most researchers agreed that the building of mono-tenure developments was a thing of the past and no longer had a role to play.
- Tenure integration does not reduce property prices, provided that the design of the overall development and the quality of the housing is of a high standard.
- A range of house types, sizes and tenures helps to stabilise neighbourhoods, encouraging residents to move from private rented to purchased property, or those in apartments to family housing.
- The management of mixed-tenure developments is complex and under-researched; management structures and associated costs should be agreed before building to ensure future clarity around roles and responsibilities for long-term management.
- The impacts, positive and negative, of the boom in the private rented sector on mixed-tenure developments are particularly under-researched.

For **technical advice and support**, call **01908 747384** or visit **www.nhbc.co.uk**

GUIDANCE (CONTINUED)

The connected home: Designing and building technology into today's new homes NF67

Technology has changed the world beyond recognition, both in the workplace and in our 'connected homes'. Connectivity to the internet, at ever-faster speeds, is becoming increasingly important, and this presents both opportunities and challenges for today's designers and house builders.

This guide describes the spectrum of connected homes from present technology to future applications. Connected homes, sometimes also referred to as 'smart' homes, are loosely defined as homes in which electrical devices are connected to each other and may be connected to the internet too. This provides advantages and convenience to the residents in operating the home, and enables both the home and the residents to access a wide variety of external digital services.

A key message from the report is that the performance of wireless connection through WiFi can be affected by the number of devices simultaneously using the home network, and by WiFi from neighbouring properties, which can cause broadcast congestion. The size and geometry of the home can restrict the wireless coverage throughout, the home and certain construction materials, such as light steel framing and foil-backed plasterboard, can limit transmission. For these reasons, and because of the increasing data demands of services such as 4K television, it is recommended that careful consideration is given to locating the master phone socket in a central location and also providing some even just a couple, additional wired connections throughout the home.

The guide reviews the 'internet of things' (IoT), which is also evolving rapidly. At its most future-looking, the IoT is about connecting previously mundane appliances, such as fridges, to the internet so that they can, for example, automatically order more milk. However, there are more immediately useful IoT applications that are closer to market, such as boilers which automatically inform a servicing company when they develop a fault.

YOU NEED TO...

- Take a look at **www.nhbcfoundation.org/research** and utilise the guidance in the design and construction of your new homes.

For **technical advice and support**, call **01908 747384** or visit **www.nhbc.co.uk**

INFORMATION AND SUPPORT

NHBC ONSITE

To support site managers, NHBC has developed a free, online resource that aims to incentivise and facilitate site manager development.

On NHBC OnSite, you can:

- find help to interpret and implement NHBC Standards and Building Regulations through NHBC Standards Plus and NHBC Building Regulations Plus
- access technical support from our in-house experts
- access links to the latest and previous editions of Technical Extra
- see regular industry news and updates relevant to site managers
- build and maintain your profile, creating a summary to highlight key aspects of your career, which you can share if you wish
- complete an online Technical Assessment to demonstrate your technical expertise
- find details of our latest training events, including priority invitations to free training aimed at site managers.

Site managers can access NHBC OnSite by visiting **www.nhbcsitemanager.co.uk/.**

NHBC TRAINING COURSES

Whether it's keeping up to date with regulatory change, developing new skills or enhancing existing ones, NHBC can help with a range of construction-related training and qualification programmes aimed at registered builders. Here are a few dates for your diary for 2016.

Defects Prevention Open Course (three-day course)	
Milton Keynes	3, 10 and 17 May
Edinburgh	3, 11 and 17 May

Management of Pre-Construction Health and Safety (three-day course)	
Bristol	10–12 May
Milton Keynes	21–23 June
London	2–4 August

Site Managers Safety Training Scheme (five-day course)	
Milton Keynes	27 April, 28 April, 5 May, 11 May and 12 May

To book one of our courses, please contact **training@nhbc.co.uk** or call **0344 633 1000** and ask for **'Training'**.

TECHNICAL GUIDANCE DOCUMENTS – UPDATE

Technical Guidance Documents provide advice and acceptable solutions on a wide variety of construction issues that have been raised with NHBC over the years.

Additional guidance has now been added, along with updates of some of the previous documents.

All Technical Guidance Documents are included as supporting documents for the relevant chapters in NHBC Standards Plus. A complete list of all Technical Guidance Documents is also available on the website:

http://www.nhbc.co.uk/builders/productsandservices/techzone/nhbcstandards/technicalguidancedocuments/

Further updates are planned, so please check the website regularly.


TECHNICAL GUIDANCE

CAVITY TRAYS TO OPENINGS WITH SOLDIER COURSES OR STONE LINTELS

6.1/05 January 2016 (Second Issue - supersedes Dec 2008)

QUESTIONS

1) Where provided, is it acceptable for cavity trays be located above a soldier course/stone head/arched former supported on a metal lintel?

2) Where should the cavity tray be located when the stone/concrete head is loadbearing and there is no separate supporting metal lintel?

CONSIDERATIONS

- NHBC Standards clause 6.1.12 describes the need for a separate cavity tray when the corrosion protection to the lintel is inadequate, where the profile of the lintel does not form a cavity tray, the site is in Scotland, Northern Ireland or Isle of Man or in areas of severe or very severe exposure to driving rain.
- The soldier course, itself, will be permeable to wind-driven rain.
- Locating the tray above the soldier course/stone head/arched former may cause difficulty with the installation of cavity insulation immediately above the lintel and problems of cold bridging/condensation.
- Reconstructed stone/concrete heads which provide structural support are generally impervious to wind-driven rain.
- Where a stone/concrete head provides the structural support it is difficult to route and discharge the cavity tray at the underside of the stone/concrete head.

Amended

ANSWERS

Where cavity trays are required to metal lintels there should be no gap between the lintel and the tray at the outer leaf.

For brickwork, weepholes should be provided above the cavity tray at 450mm centres.

For stone/concrete heads and arched formers supported on a metal lintel, the cavity tray will need to extend beyond the head/lintel to enable weepholes to be provided at each end. If a head is jointed within it's length a weephole should also be incorporated in the joint.

Where the stone/concrete head is load-bearing, with no metal lintel below, the cavity tray should be installed above the head (see diagram 1). The tray should be a bituminous DPC material to form a seal with the stone/concrete head to avoid moisture penetration. Care should be taken in installing any cavity insulation below the cavity tray to avoid cold bridging.

NHBC

page 1 of 2

For **technical advice and support**, call **01908 747384** or visit **www.nhbc.co.uk**

Useful contacts for technical information and advice

NHBC technical advice and support

Tel: 01908 747384
Email: technical@nhbc.co.uk
Web: www.nhbc.co.uk/builders/technicaladviceandsupport

Technical Extra

Previous editions of *Technical Extra* are available on our website at www.nhbc.co.uk/Builders/ProductsandServices/TechnicalExtra/

NHBC Standards

Buy online at: www.nhbc.co.uk/nhbcshop/technicalstandards or access *Standards Plus* on the NHBC website at www.nhbc.co.uk/StandardsPlus

Using your smartphone and QR reader, you can also scan the codes below to jump directly to Standards Plus 2016 or the NHBC 3D Viewer app (via the App Store and Google Play).

Standards Plus 2016

NHBC 3D Viewer app

Building Regulations

For guidance on issues relating to Building Regulations, please visit NHBC's TechZone at www.nhbc.co.uk/techzone.

Building Control

For Building Control queries, please call 0344 633 1000 and ask for **'Building Control'**, or email buildingcontroladmin@nhbc.co.uk.

NHBC OnSite

Technical resources and career support for registered site managers.

www.nhbcsitemanager.co.uk

Engineering queries

For Engineering queries, please call 0344 633 1000 and ask for **'Engineering'**.

NHBC Foundation research

The NHBC Foundation facilitates research and shares relevant guidance and good practice with the house-building industry.

www.nhbcfoundation.org

Training

For information about training, please go to www.nhbc.co.uk/training, call 0344 633 1000 and ask for '**Training**', or email training@nhbc.co.uk.

The Zero Carbon Hub

The Zero Carbon Hub ceased operations on 31 March 2016. Further information and copies of the work carried out over the eight years of operation remains available at:

www.zerocarbonhub.org

NHBC Clicks & Mortar e-newsletter

NHBC regularly distributes information on a range of industry topics, including new products and services, the building industry market, house-building news and statistics. To receive this industry information, please register at:

www.nhbc.co.uk/newsandcomment/registerfore-news

General enquiries

For all other enquiries, including ordering products and services, please call 0344 633 1000, and ask for **'Sales'**.

NHBC is authorised by the Prudential Regulation Authority and regulated by the Financial Conduct Authority and the Prudential Regulation Authority.

This leaflet has been printed on material which is produced from well-managed forests and is fully recyclable and biodegradable, ECF (elemental chlorine free) and is made to ISO 14001 Environmental Certification.

recycle
www.recyclenow.com

NHBC, NHBC House,
Davy Avenue, Knowlhill,
Milton Keynes,
Bucks MK5 8FP
Tel: 0344 633 1000
Fax: 01908 747255
www.nhbc.co.uk

NHBC
Raising Standards. Protecting Homeowners

HB2893 04/16