ZERO CARBON HUB

THERMAL BRIDGING GUIDE

An introductory guide to thermal bridging in homes

FMB The sign of building quality

NHBC

citb

LABC

HBF HOME BUILDERS FEDERATION

c4ci Consultants Construction Innovation

CONTACTS

Further copies of this guide are available as a PDF download from **www.zerocarbonhub.org**

Or contact us

Zero Carbon Hub
Layden House
76-86 Turnmill Street
London EC1M 5LG
T: 0845 888 7620
E: info@zerocarbonhub.org

C4Ci Consultants
Expert and approachable technical consultants on building performance, thermal modelling, construction product development and accreditation.

T: 01256 892211
E: luke.whale@c4ci.eu

SIG360 Technical Centre
Provides a service offering that focuses on helping customers deliver energy efficient buildings.

Central to SIG360 is an easily accessible impartial team of technical specialists, who draw on over 55 years of experience and an extensive range of products in providing the most cost effective build, suited to your preferred building style.

ACKNOWLEDGEMENTS

The Zero Carbon Hub is very grateful to the following contributors/ organisations for their involvement in developing this Guide.

Author
Dr. Luke Whale, C4Ci Consultants

Project Advisors
Rob Pannell, Tessa Hurstwyn, Ben Griggs, Zero Carbon Hub

Graphic Design and Illustration
Richard Hudson, www.richardhudson.me

Steering Group
Richard Bayliss, CITB
Andrew Carpenter, Structural Timber Association
Chris Carr, Federation of Master Builders/Carr & Carr Builders
Darren Dancey, Crest Nicholson
Tom Dollard, Pollard Thomas Edwards
Milicia Kitson, Constructing Excellence in Wales
Mike Leonard, Building Alliance
Paul McGivern, Homes & Communities Agency
Andrew Orriss, SIG Plc
Richard Partington, Studio Partington
Graham Perrior, NHBC
John Slaughter, Home Builders Federation
Barry Turner, LABC

CONTENTS

The Technical Annex can be found in the electronic version of this Guide available at www.zerocarbonhub.org

INTRODUCTION

This document provides a simple guide to what thermal bridging is, the key construction details in new build housing where thermal bridging is particularly significant, examples of ways in which heat loss can be reduced by changes to the design and construction of these details, and the problem areas to avoid on site.

It is intended to help designers and builders focus on the key decisions that they can affect around junction detailing which will have a direct bearing on the performance of the new homes they help to deliver.

This Guide begins with a few explanatory pages describing what thermal bridges are and how their effects are quantified.

Key construction details are then illustrated for both masonry and timber frame construction showing how their thermal performance can either be improved or compromised by adopting alternative construction details, material specifications or site practices. This is the main part of the document.

The electronic version of this Guide also contains an Annex aimed at those who would like further information, covering: general principles to improve junction performance, the benefits in SAP of improved junction details, illustrated guidance to identify all relevant linear thermal bridges, how to establish the key junctions for a particular dwelling type, and a summary of the results of the PSI-value modelling work carried out for this Guide.

Please Note

⚠ **The details drawn in this Guide are for illustrative purposes only and should not be used as working drawings.** For example, consideration must also be given to structure, waterproofing, airtightness, general good practice and sequencing on site.

⚠ **The PSI-values quoted in this Guide are for indicative purposes only and should not be used in SAP calculations.**

Various sources exist to obtain PSI-values for the building junctions of interest, as follows:

- Generic industry sponsored libraries covering the common building types e.g. LABC (http://www.labc.co.uk/registration-schemes/construction-details) or Scottish Standards (http://www.gov.scot/Topics/Built-Environment/Building/Building-standards/publications/pubtech)
- Individual product or building system manufacturer sponsored libraries, covering specific building products/systems.
- Bespoke PSI-values calculated by 'competent persons' for specific developments.

UNDERSTANDING THE DETAIL PAGES

Construction type:

Masonry

Timber Frame

Construction detail type (with SAP Table K1 reference)

Primary responsibility: Designer Builder

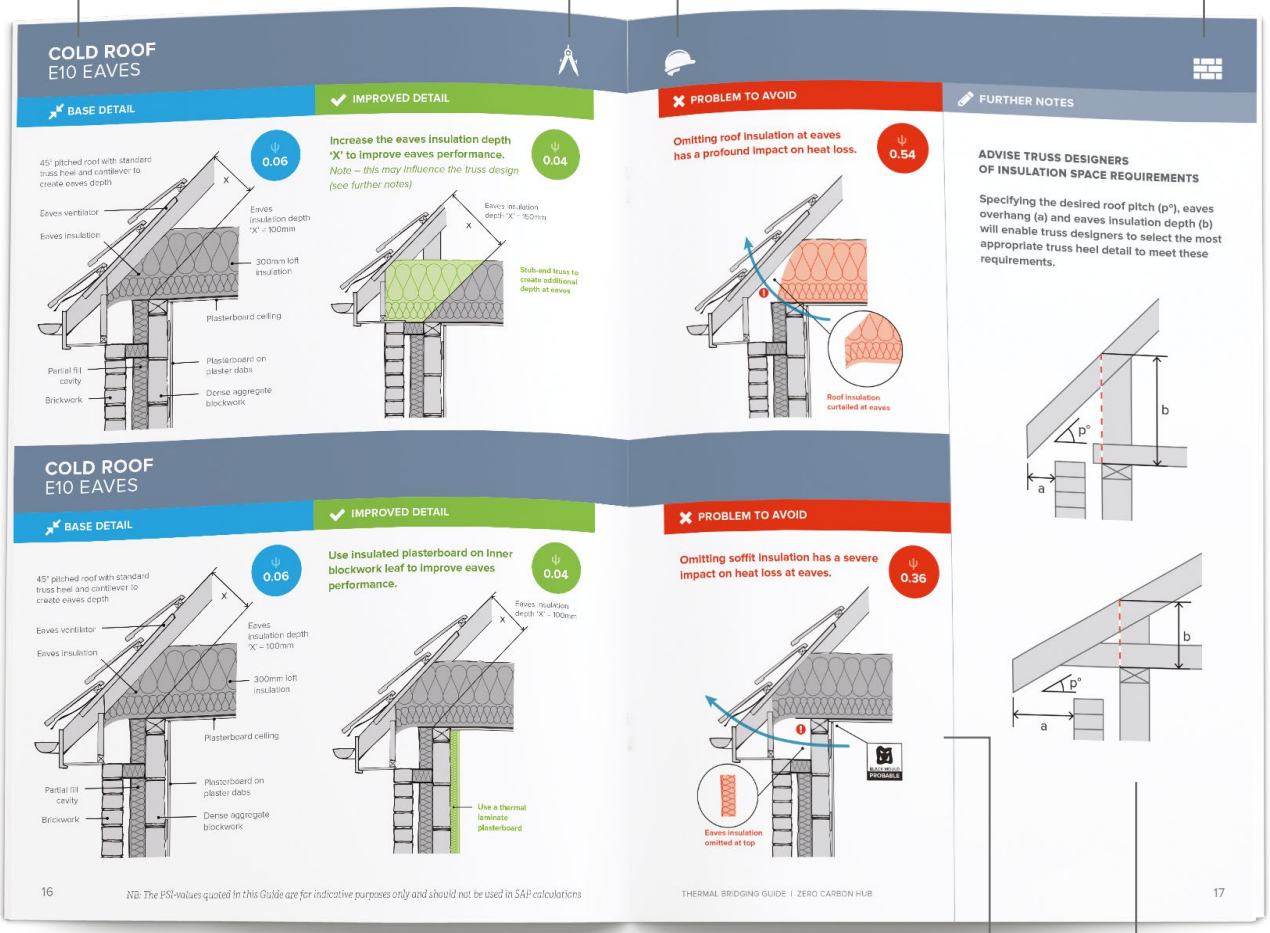

Blue themes = base construction (assumed starting point)

Green themes = possible design improvements

Red themes = problem areas to be avoided and checked on site

Additional useful information

Guide PSI-values are displayed in theme coloured circles

For indicative purposes only, black mould risk is identified where this becomes a likely consequence of problem details

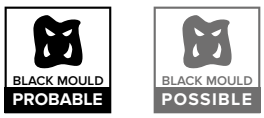

Heat loss path illustrated by blue arrows

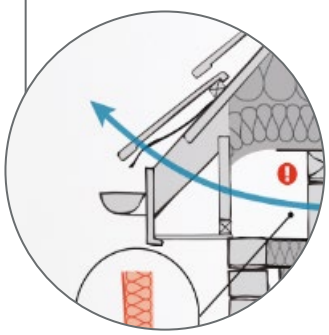

WHAT ARE THERMAL BRIDGES?

A thermal bridge (sometimes called a cold bridge) is a localised weakness or discontinuity in the thermal envelope of a building. They generally occur when the insulation layer is interrupted by a more conductive material.

The type of thermal bridges considered in this Guide are called non-repeating or linear thermal bridges. These occur at junctions between elements, such as a wall and a floor or a window and a wall. At these locations heat is more able to transfer through the construction, resulting in greater heat loss from the dwelling and localised 'cold spots' in the building envelope.

Improving junction details to reduce linear thermal bridging will help achieve Building Regulations compliance and is one component in achieving healthy low energy homes.

THE EFFECTS OF THERMAL BRIDGES

Increased heat loss
Thermal bridges can account for 20-30% of the heat loss in a typical new build home. As homes become better insulated thermal bridges become even more significant.

Localised 'cold-spots'
Sometimes leading to condensation build-up or mould growth.

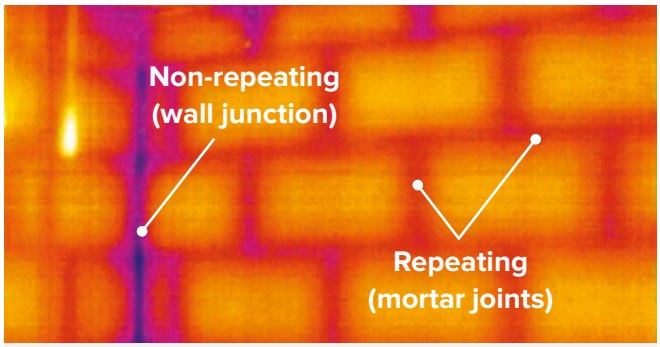

REPEATING AND NON-REPEATING THERMAL BRIDGES

There are two types of thermal bridges in buildings - repeating and non-repeating thermal bridges.

Examples of **repeating** thermal bridges are mortar joints and wall-ties in masonry construction or timber or steel studs in framed construction. Where the frequency of these is known and consistent their effects can be accounted for directly in the U-value calculation for the building element itself.

The remaining **non-repeating** thermal bridges are dealt with by "PSI-values" – pronounced 'Si ' (silent p), and designated by the Greek letter 'ψ'. Their effects on heat loss are calculated by thermal modelling software, and they are accounted for separately in SAP calculations in addition to U-values.

KEY JUNCTIONS

Although there are many junctions within a dwelling, some have extremely low PSI-values and others occur over very short lengths. The key junctions to 'get right' or improve are those which either have a high PSI-value or occur frequently over significant lengths. Although the particular junctions of interest will vary depending on dwelling type and design, this Guide covers the key junctions considered by the authors to be the most significant across a range of dwelling types.

HOW IS FABRIC HEAT LOSS QUANTIFIED?

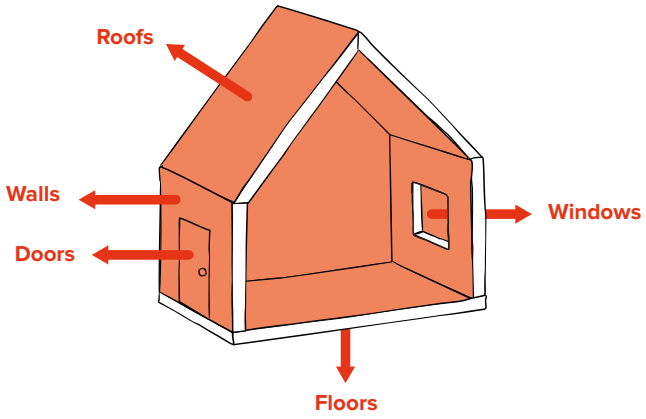

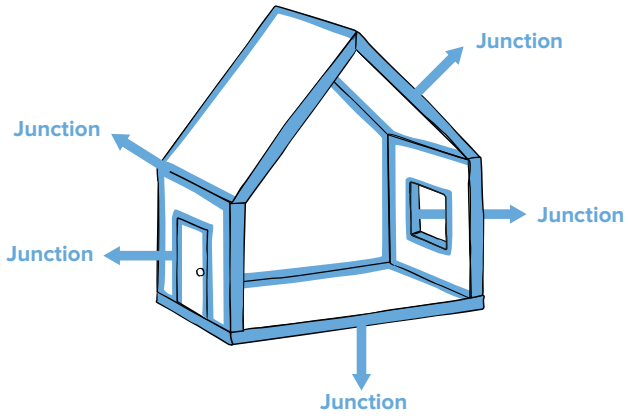

ELEMENT LOSSES

ELEMENT U-VALUES (W/m²K)

Quantify the heat loss from each of the external building elements such as floors, walls, windows, doors etc. The area of each element multiplied by its **U-value** gives its anticipated heat loss.

THERMAL BRIDGE LOSSES

JUNCTION PSI-VALUES (W/mK) → **DWELLING Y-VALUE (W/m²K)**

Quantify the heat loss from each of the junctions where the building elements meet (thermal bridges). Multiplying the junction **PSI-value** by the junction length gives the junction heat loss.

The sum of the individual junction heat losses divided by the total exposed surface area of the dwelling gives the **Y-value**. The Y-value expresses the overall heat loss arising from all of the building junctions as an equivalent U-value for the dwelling.

In SAP fabric heat loss is quantified by a combination of U-values and Y-values

ELEMENT LOSSES: U-VALUES x ELEMENT AREAS — 70-80% of fabric heat loss

+

THERMAL BRIDGE LOSSES: Y-VALUE x TOTAL EXPOSED SURFACE AREA — 20-30% of fabric heat loss

=

TOTAL FABRIC HEAT LOSS

Note: Lower U-values, Y-values and PSI-values will result in lower fabric heat loss.

MASONRY CONSTRUCTION

TOP THERMAL BRIDGING TIPS
MASONRY CONSTRUCTION

KEY DESIGN RECOMMENDATIONS

	Design recommendation	No. of junctions affected	Junction references
1	Use a split or thermally broken lintel	1	E2 (page 8)
2	Use light aggregate blockwork inner leaf	4	E5, P1, E12, P4 (pages 12, 14, 18, 20)
3	Use a PU/PIR cavity closer	3	E2, E3, E4 (pages 8, 10)
4	Use insulated plasterboard on the inner leaf	5	E2, E4, E10, E12, P4 (pages 8, 10, 16, 18, 20)
5	Use a window frame overlap of min. 50mm	3	E2, E3, E4 (pages 8, 10)
6	Increase eaves insulation depth	1	E10 (page 16)

KEY PROBLEMS TO AVOID

	Problem / site check	No. of junctions affected	Junction references	Black mould risk
1	Omitting rafter insulation at eaves	1	E10 (page 16)	
2	Omitting insulation between truss and wall	2	E12, P4 (pages 18, 20)	BLACK MOULD PROBABLE
3	Omitting soffit insulation at eaves	1	E10 (page 16)	BLACK MOULD PROBABLE
4	Stopping party wall cavity insulation short of loft	1	P4 (page 20)	BLACK MOULD POSSIBLE
5	Swapping a split lintel with a perforated steel lintel	1	E2 (page 8)	
6	Omitting the cavity closure	3	E2, E3, E4 (pages 8, 10)	
7	Omitting cavity insulation below DPC	2	E5, P1 (pages 12, 14)	
8	Omitting floor perimeter insulation	2	E5, P1 (pages 12, 14)	BLACK MOULD POSSIBLE
9	No window frame overlap with cavity	3	E2, E3, E4 (page 8, 10)	

INDEPENDENT LINTEL
E2 LINTELS

BASE DETAIL

ψ 0.08

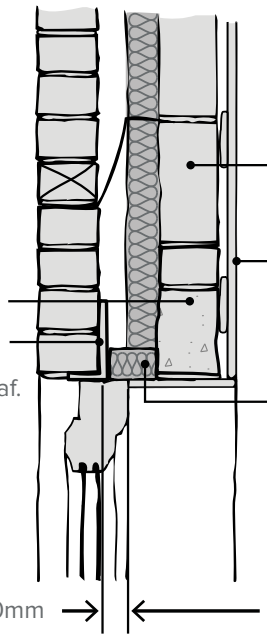

IMPROVED DETAIL

Use a cavity closer with a PU/PIR insulation core to improve performance for independent lintels.

ψ 0.04

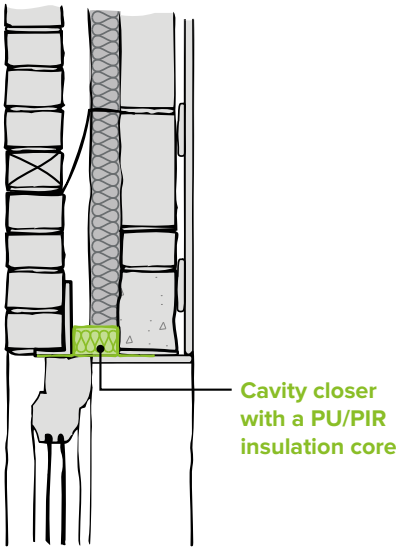

PERFORATED STEEL LINTEL
E2 LINTELS

BASE DETAIL

ψ 0.27

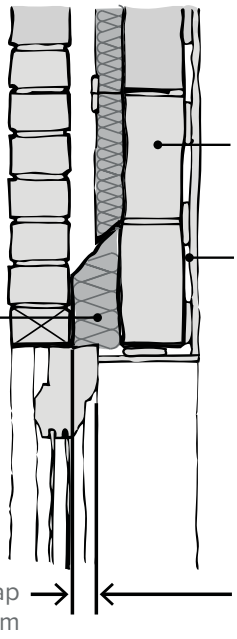

IMPROVED DETAIL

Use an insulated plasterboard reveal to improve performance for perforated steel lintels.

ψ 0.21

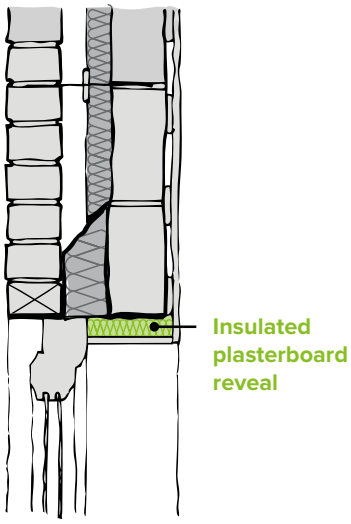

NB: The PSI-values quoted in this Guide are for indicative purposes only and should not be used in SAP calculations

PROBLEM TO AVOID

Omitting the cavity closer makes heat loss significantly worse.

ψ 0.26

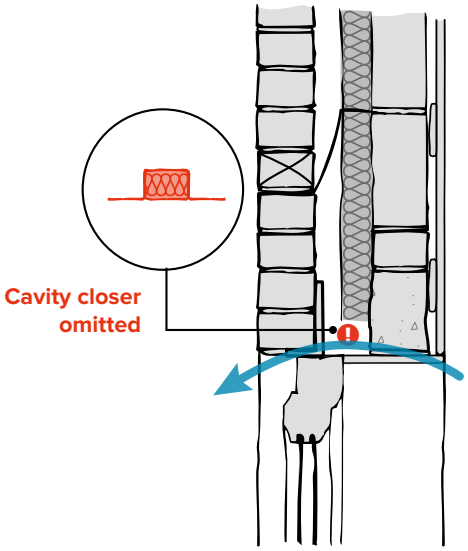

PROBLEM TO AVOID

Reducing the frame overlap to 0mm makes heat loss worse.

ψ 0.15

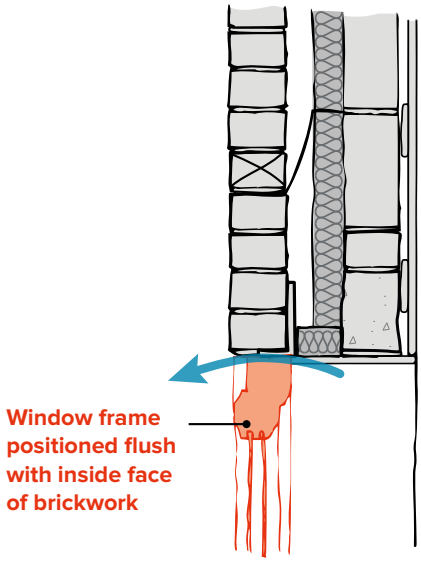

PROBLEM TO AVOID

Reducing the frame overlap to 0mm makes heat loss worse.

ψ 0.31

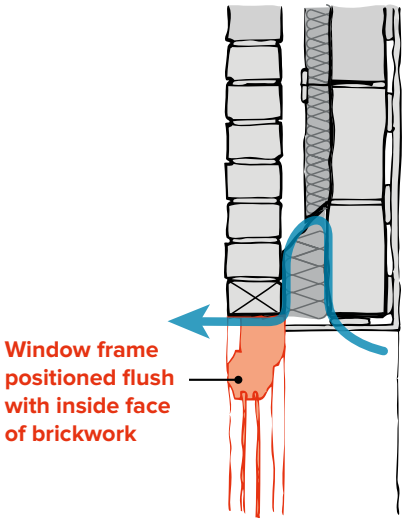

FURTHER NOTES

LINTEL SELECTION

Independent lintels have Ψ-values approximately Ψ = 0.2 lower than perforated steel lintels.

FRAME OVERLAP

Increasing the frame overlap from 30mm to 50mm will also reduce the Ψ-value of lintels, sills and jambs by approximately Ψ = 0.02.

WINDOW
E3 SILL

BASE DETAIL

ψ 0.05

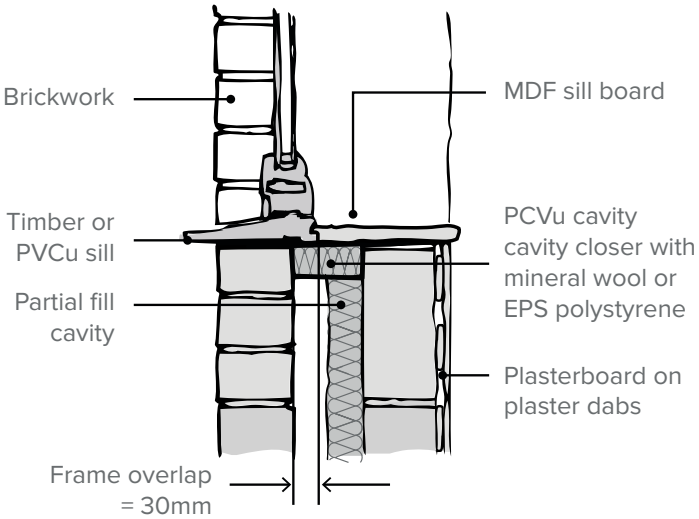

IMPROVED DETAIL

Use a cavity closer with a PU/PIR insulation core to improve the performance of sills and jambs.

ψ 0.03

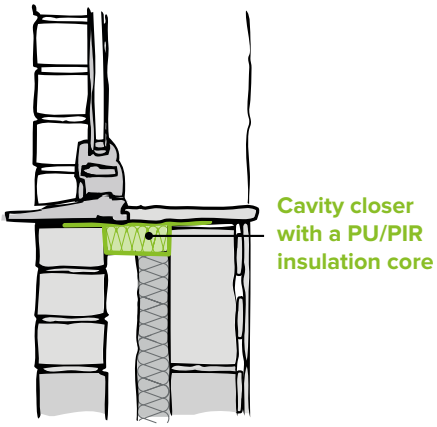

WINDOW
E4 JAMB

BASE DETAIL

ψ 0.05

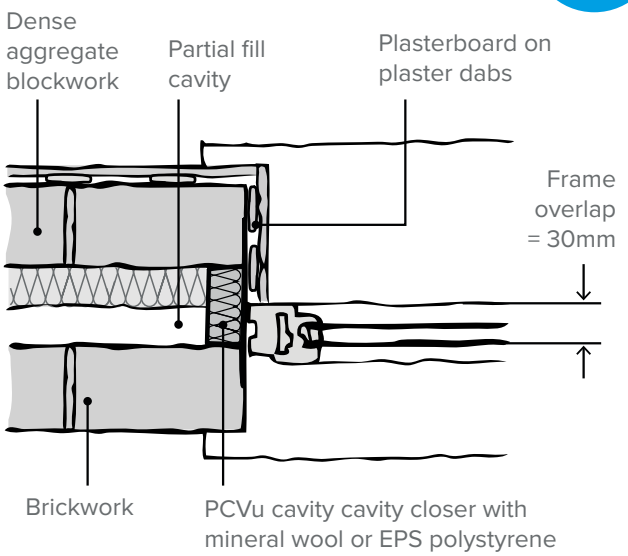

IMPROVED DETAIL

Use an insulated plasterboard reveal to improve the performance of window jambs.

ψ 0.03

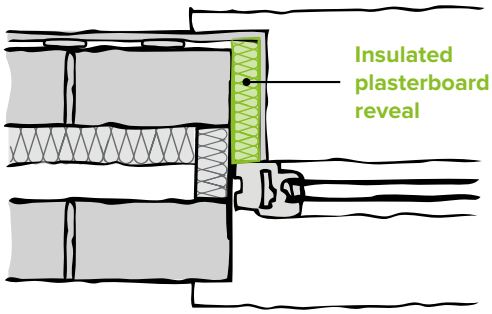

NB: The PSI-values quoted in this Guide are for indicative purposes only and should not be used in SAP calculations

PROBLEM TO AVOID

Reducing the frame overlap to 0mm makes heat loss worse for sills.

ψ 0.09

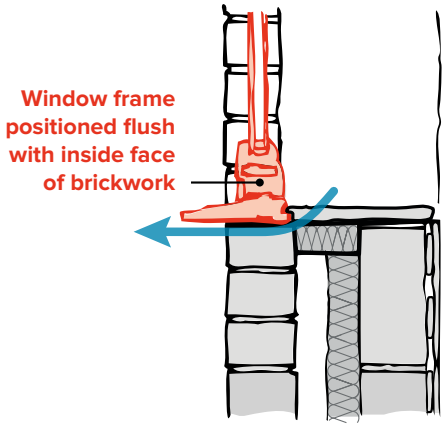

PROBLEM TO AVOID

Omitting the cavity closer makes heat loss worse for sills.

ψ 0.15

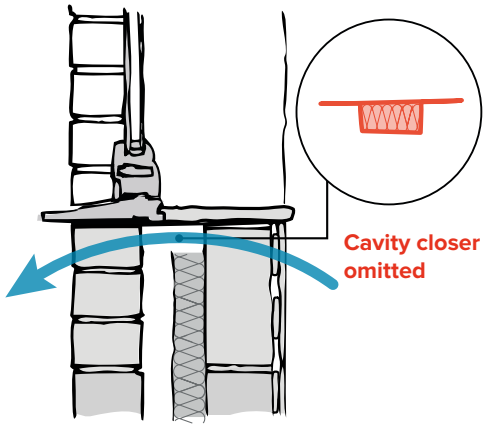

PROBLEM TO AVOID

Reducing the frame overlap to 0mm makes heat loss worse for jambs.

ψ 0.12

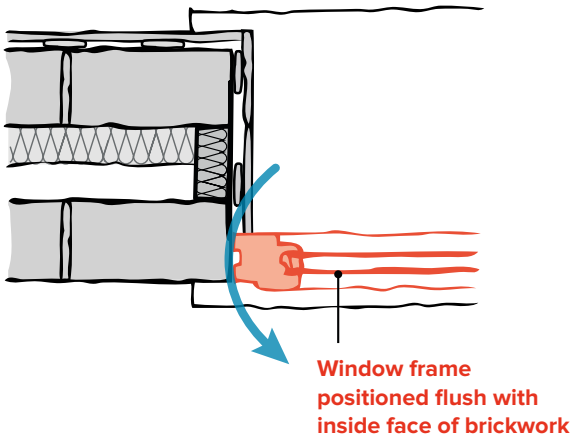

PROBLEM TO AVOID

Omitting the cavity closer makes heat loss worse for jambs.

ψ 0.12

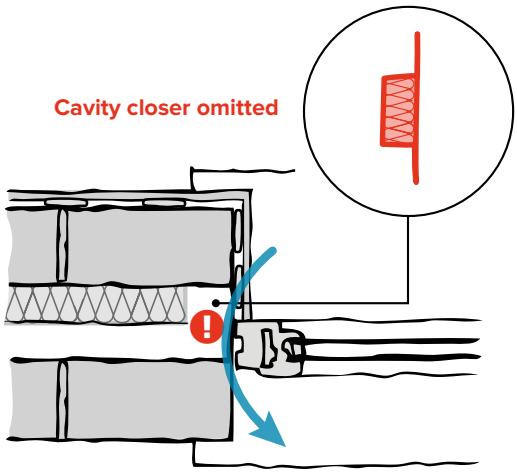

GROUND BEARING FLOOR
E5 EXTERNAL WALL

BASE DETAIL

ψ 0.17

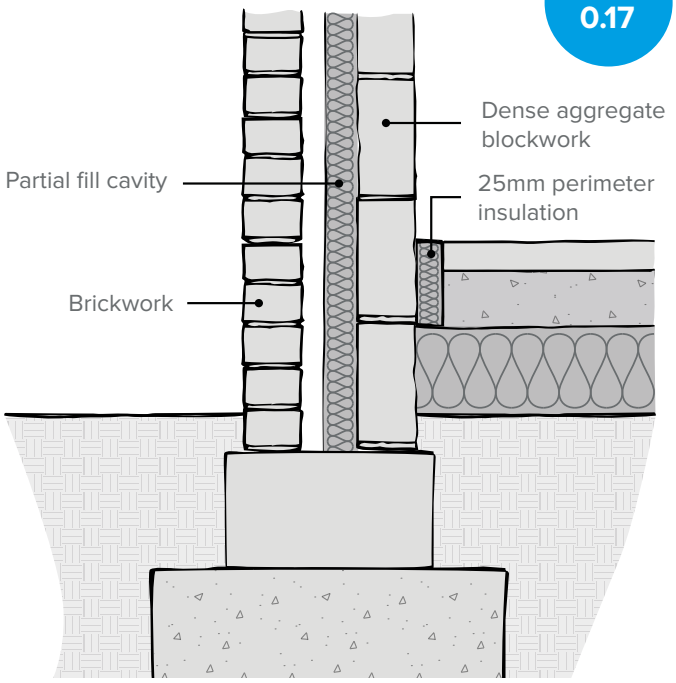

IMPROVED DETAIL

Use lightweight aggregate blockwork on the inner leaf to improve ground floor performance.

ψ 0.06

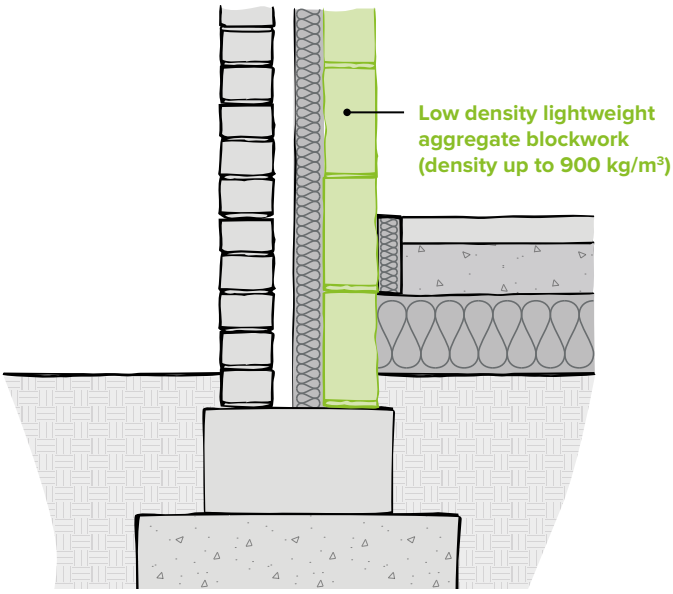

GROUND BEARING FLOOR
P1 PARTY WALL

BASE DETAIL

ψ 0.14

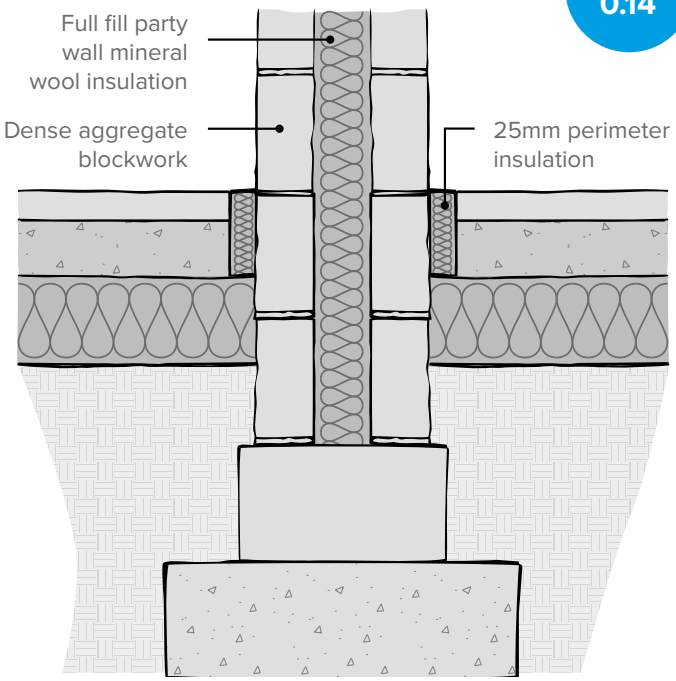

IMPROVED DETAIL

Use lightweight aggregate blockwork on the inner leaf to improve ground floor performance.

ψ 0.06

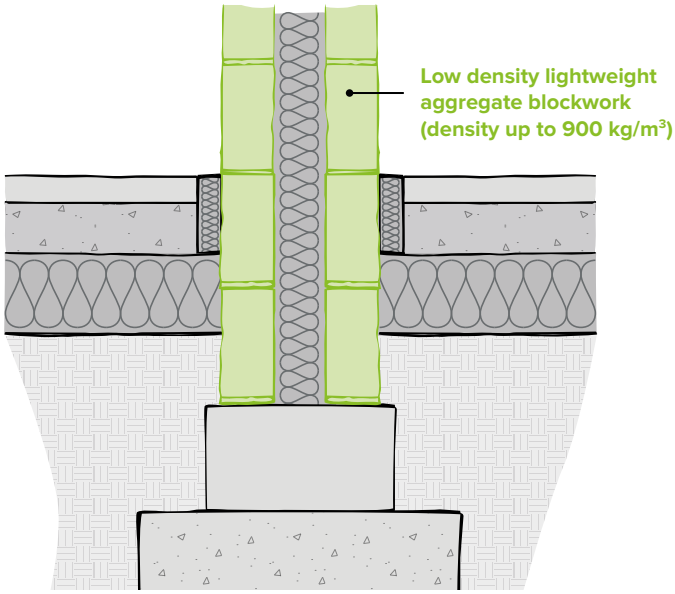

NB: The PSI-values quoted in this Guide are for indicative purposes only and should not be used in SAP calculations

PROBLEM TO AVOID

Omitting cavity insulation below DPC makes heat loss significantly worse.

ψ 0.32

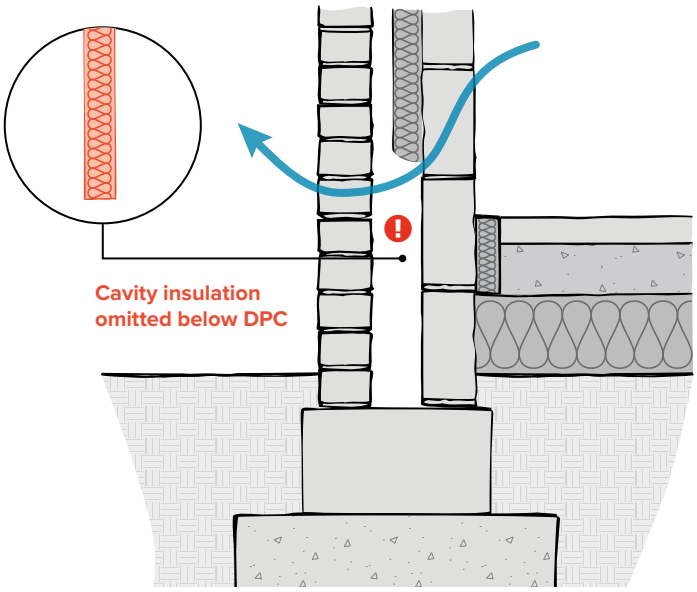

PROBLEM TO AVOID

Omitting the floor perimeter insulation makes heat loss worse.

ψ 0.23

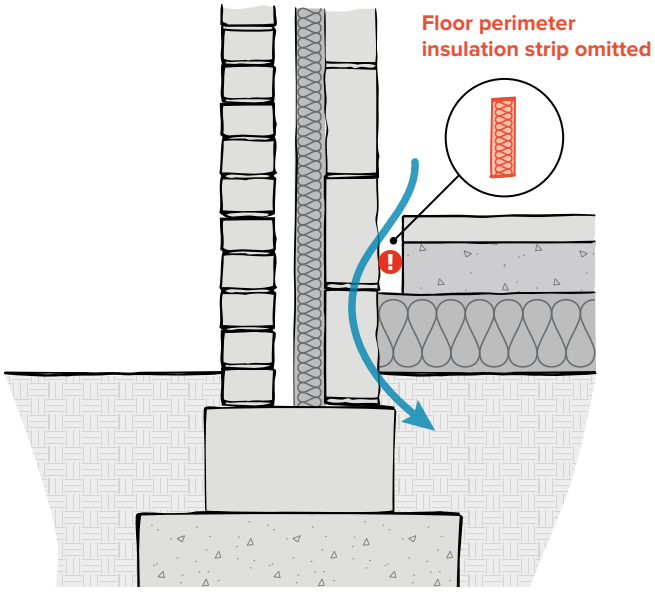

PROBLEM TO AVOID

Omitting the floor perimeter insulation makes heat loss worse.

ψ 0.17

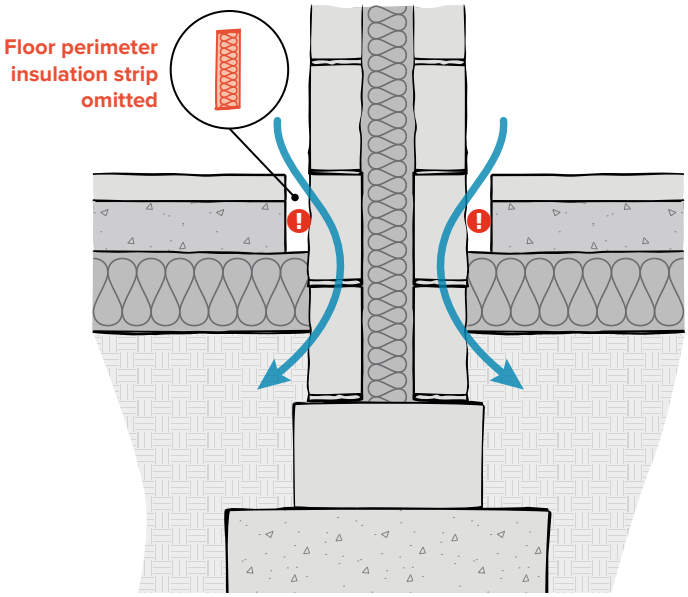

FURTHER NOTES

CAVITY INSULATION OMISSION

Omitting the cavity insulation at the party wall base also makes heat loss worse.

BEAM AND BLOCK FLOOR
E5 EXTERNAL WALL

BASE DETAIL

ψ 0.16

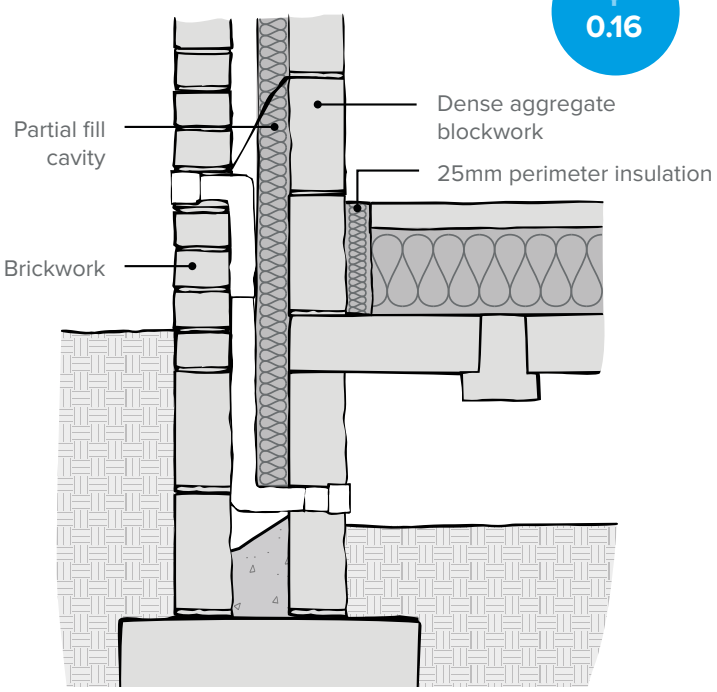

IMPROVED DETAIL

Use lightweight aggregate blockwork on the inner leaf to improve ground floor performance.

ψ 0.05

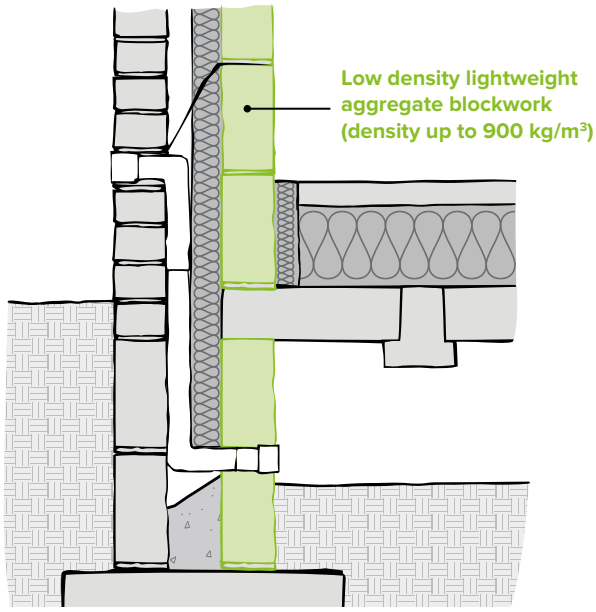

BEAM AND BLOCK FLOOR
P1 PARTY WALL

BASE DETAIL

ψ 0.19

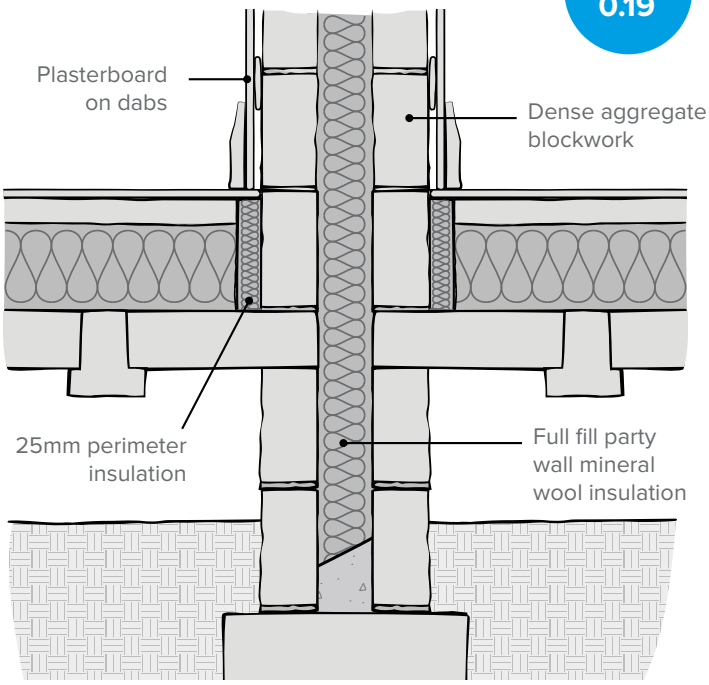

IMPROVED DETAIL

Use lightweight aggregate blockwork to improve ground floor performance.

ψ 0.06

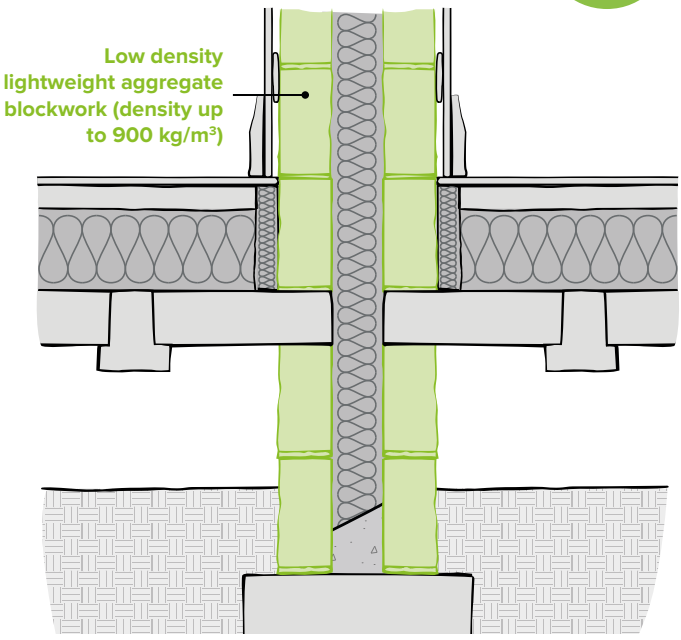

NB: The PSI-values quoted in this Guide are for indicative purposes only and should not be used in SAP calculations

PROBLEM TO AVOID

Omitting cavity insulation below DPC makes heat loss significantly worse.

ψ 0.26

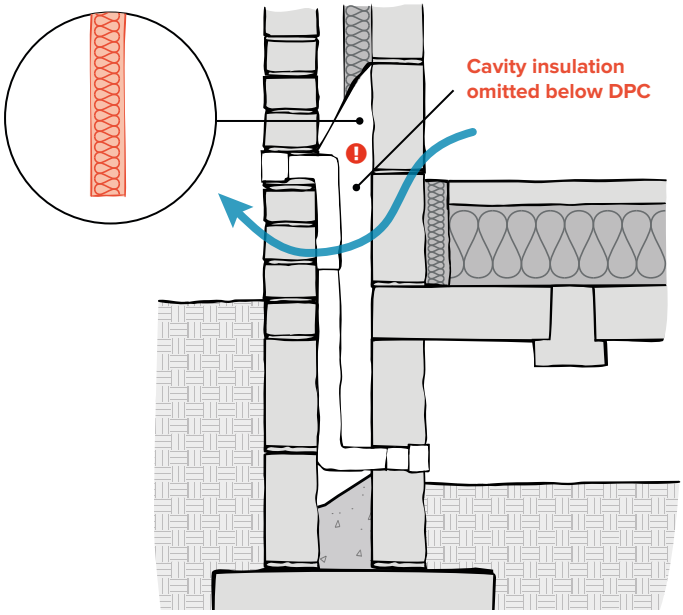

PROBLEM TO AVOID

Omitting the floor perimeter insulation makes heat loss worse.

ψ 0.19

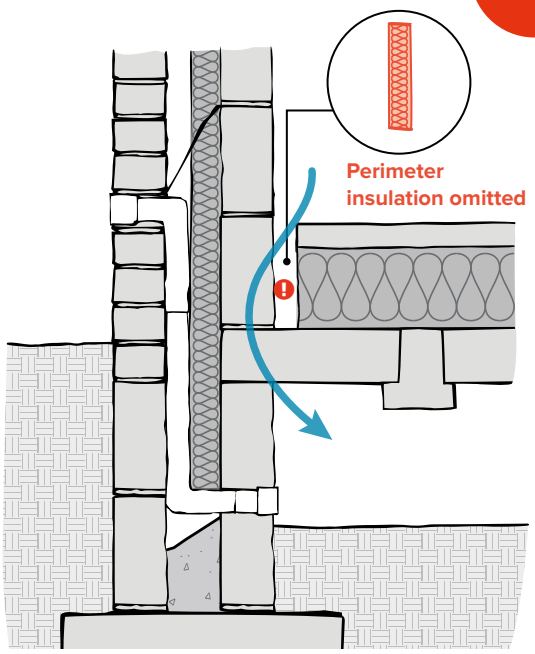

PROBLEM TO AVOID

Omitting the floor perimeter insulation makes heat loss worse.

ψ 0.21

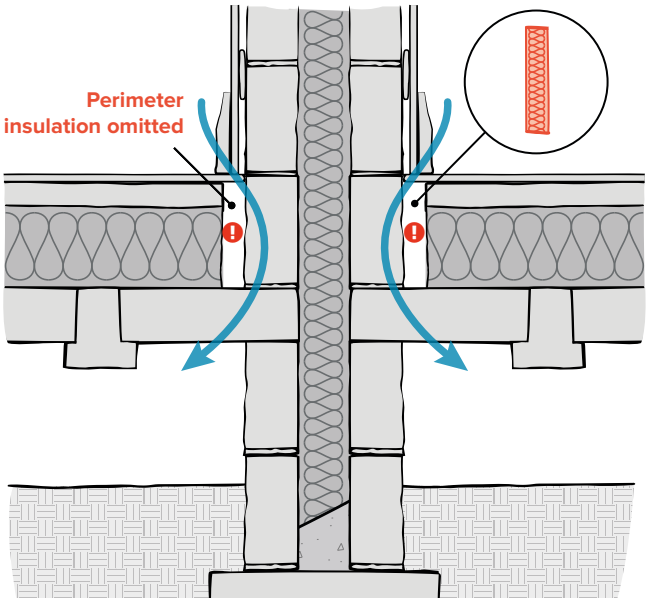

FURTHER NOTES

CAVITY INSULATION OMISSION

Omitting the cavity insulation at the party wall base also makes heat loss worse.

COLD ROOF
E10 EAVES

BASE DETAIL

ψ 0.06

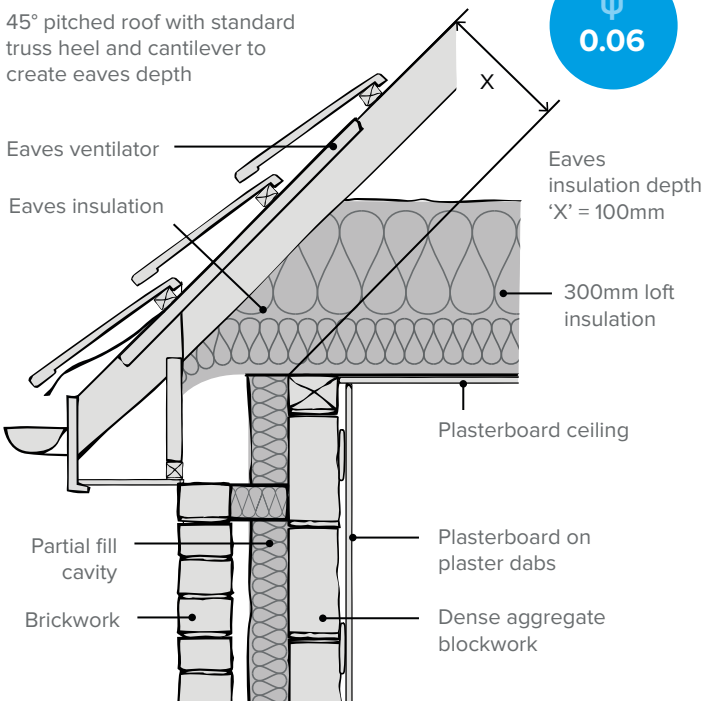

IMPROVED DETAIL

Increase the eaves insulation depth 'X' to improve eaves performance.

Note – this may influence the truss design (see further notes)

ψ 0.04

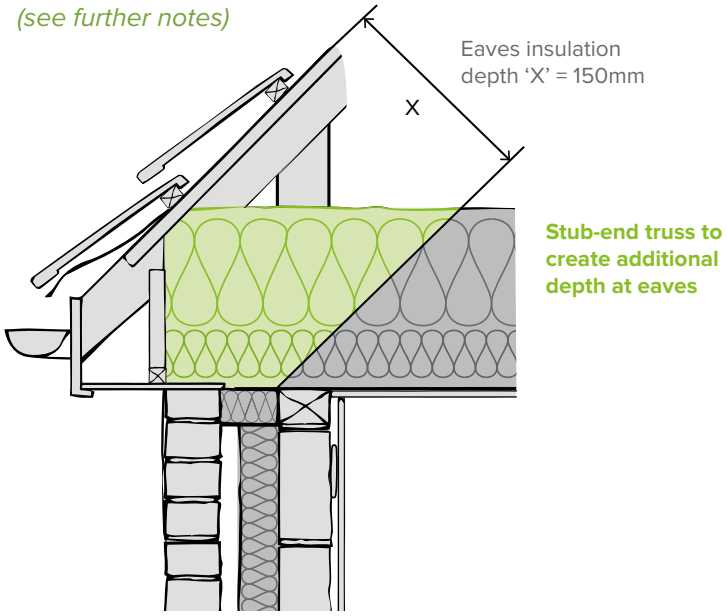

COLD ROOF
E10 EAVES

BASE DETAIL

ψ 0.06

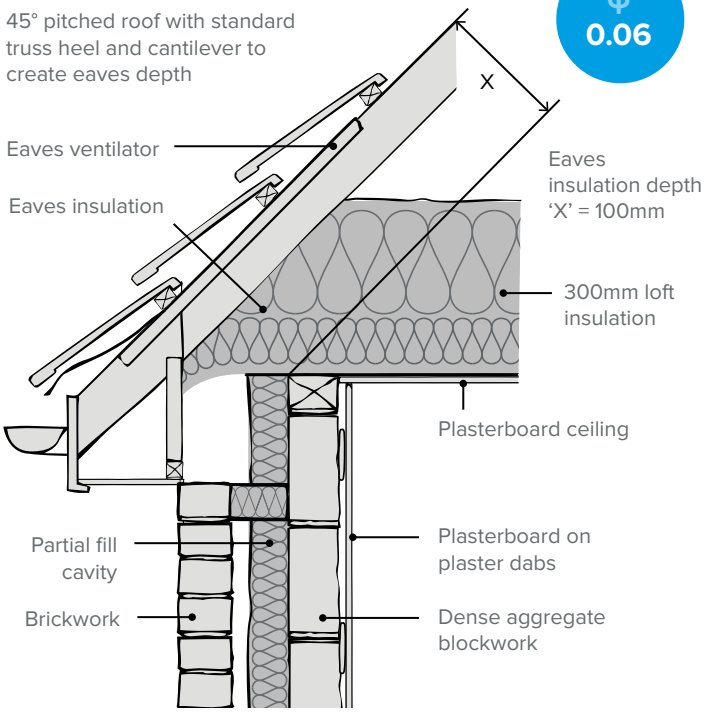

IMPROVED DETAIL

Use insulated plasterboard on inner blockwork leaf to improve eaves performance.

ψ 0.04

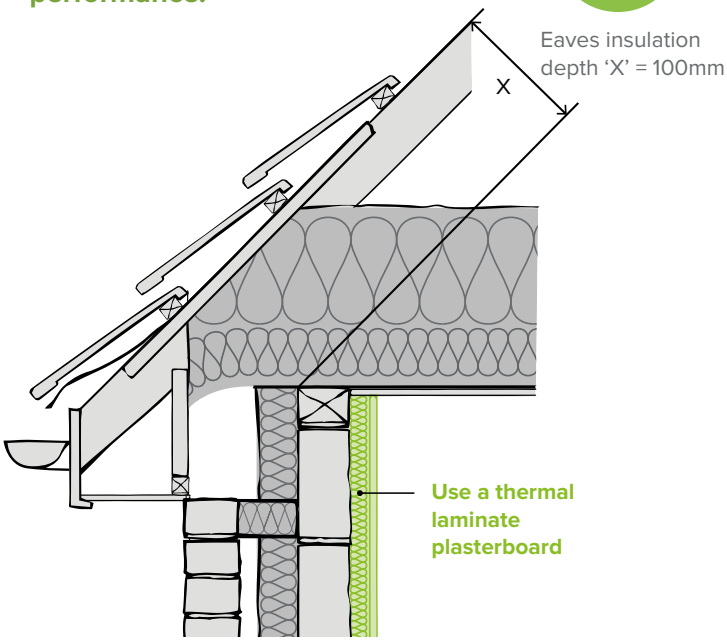

NB: The PSI-values quoted in this Guide are for indicative purposes only and should not be used in SAP calculations

PROBLEM TO AVOID

Omitting roof insulation at eaves makes heat loss significantly worse.

ψ 0.54

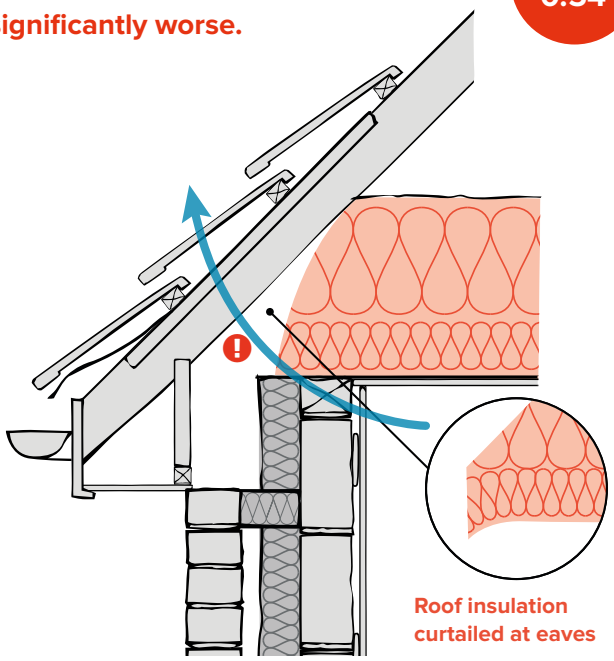

PROBLEM TO AVOID

Omitting soffit insulation makes heat loss significantly worse at eaves.

ψ 0.36

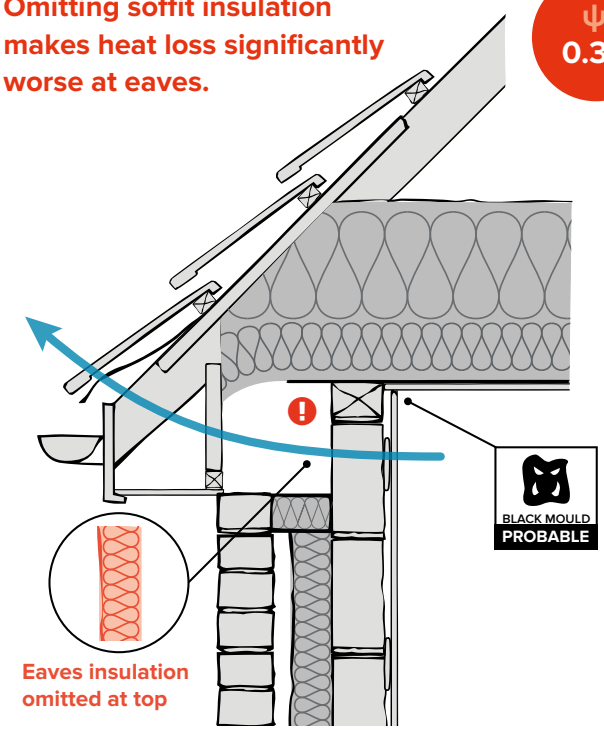

FURTHER NOTES

ADVISE TRUSS DESIGNERS OF INSULATION SPACE REQUIREMENTS

Specifying the desired roof pitch (p°), eaves overhang (a) and eaves insulation depth (b) will enable truss designers to select the most appropriate truss heel detail to meet these requirements.

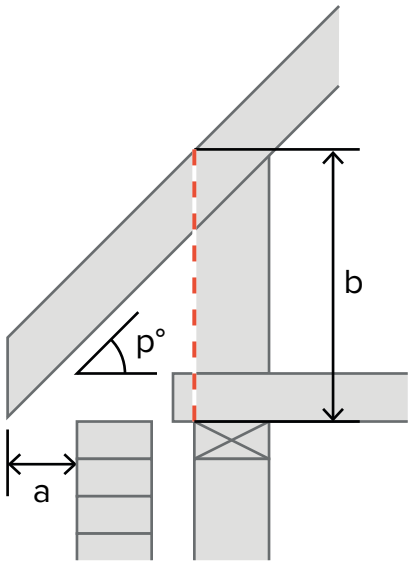

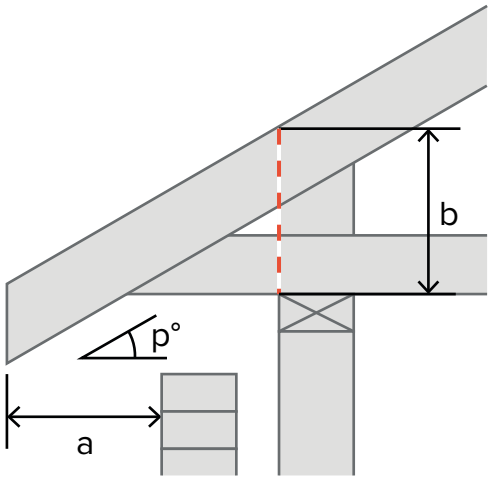

COLD ROOF
E12 GABLE

BASE DETAIL

ψ 0.20

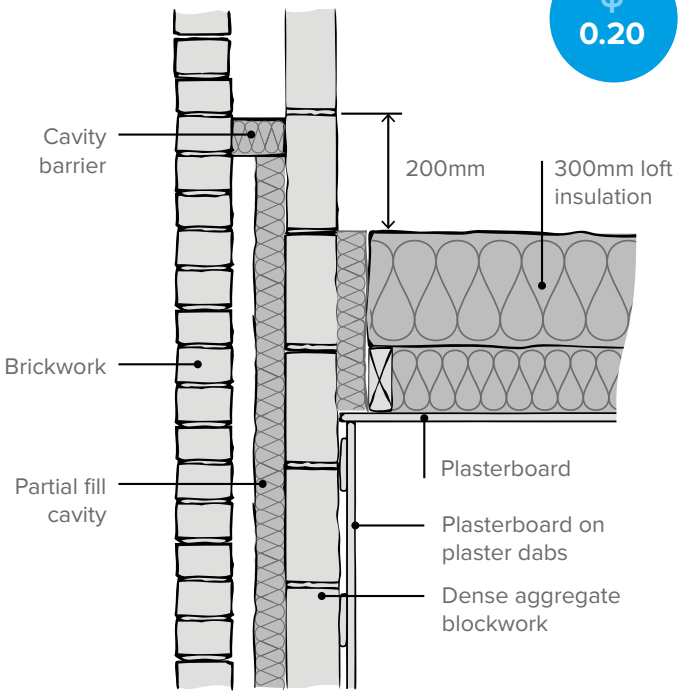

IMPROVED DETAIL

Use lightweight aggregate blockwork on the inner leaf to improve gable performance.

ψ 0.08

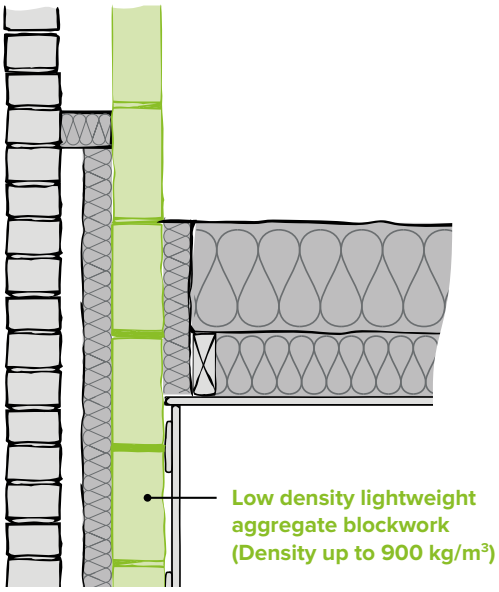

COLD ROOF
E12 GABLE

BASE DETAIL

ψ 0.20

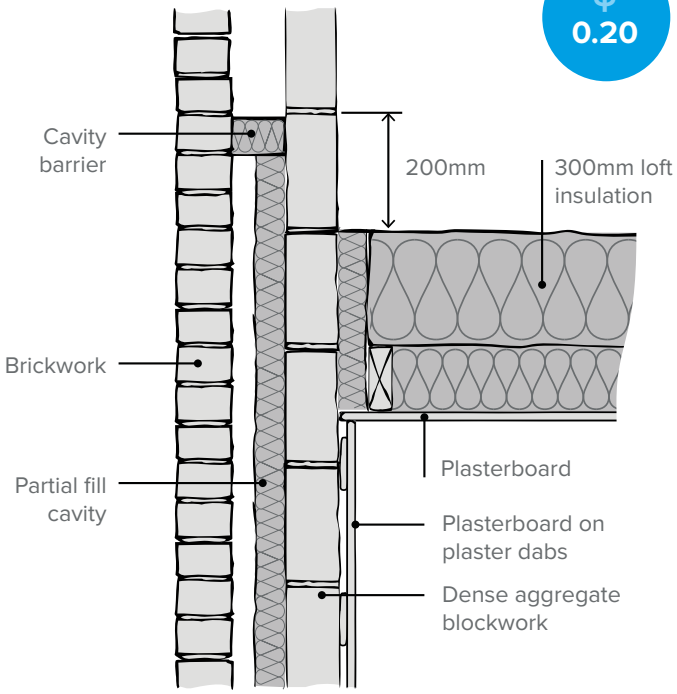

IMPROVED DETAIL

Use insulated plasterboard on inner blockwork leaf to improve gable performance.

ψ 0.12

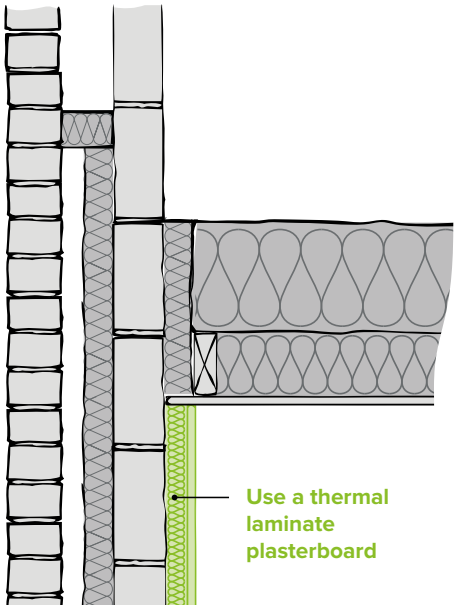

NB: The PSI-values quoted in this Guide are for indicative purposes only and should not be used in SAP calculations

PROBLEM TO AVOID

Stopping the cavity wall insulation short makes heat loss significantly worse at gables.

ψ 0.39

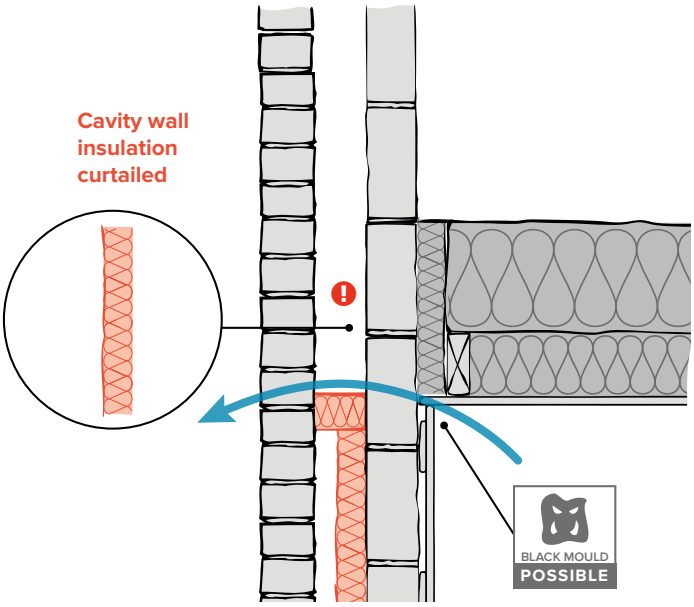

PROBLEM TO AVOID

Omitting the roof perimeter insulation makes heat loss significantly worse at gables.

ψ 0.58

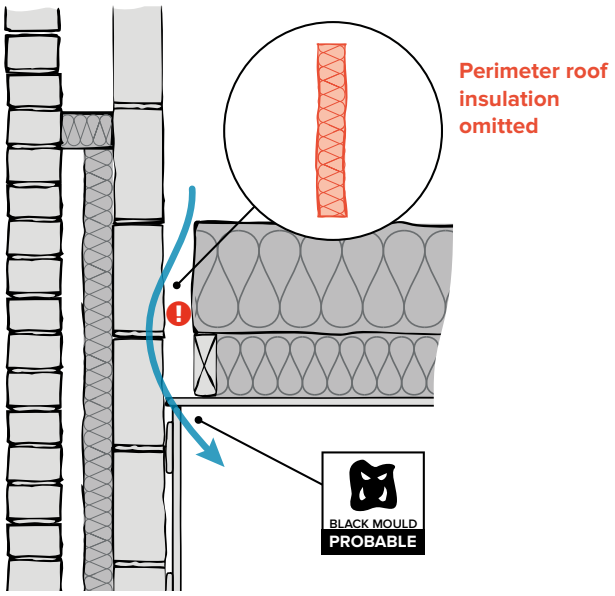

FURTHER NOTES

COLD ROOF
P4 PARTY WALL HEAD

BASE DETAIL

ψ 0.20

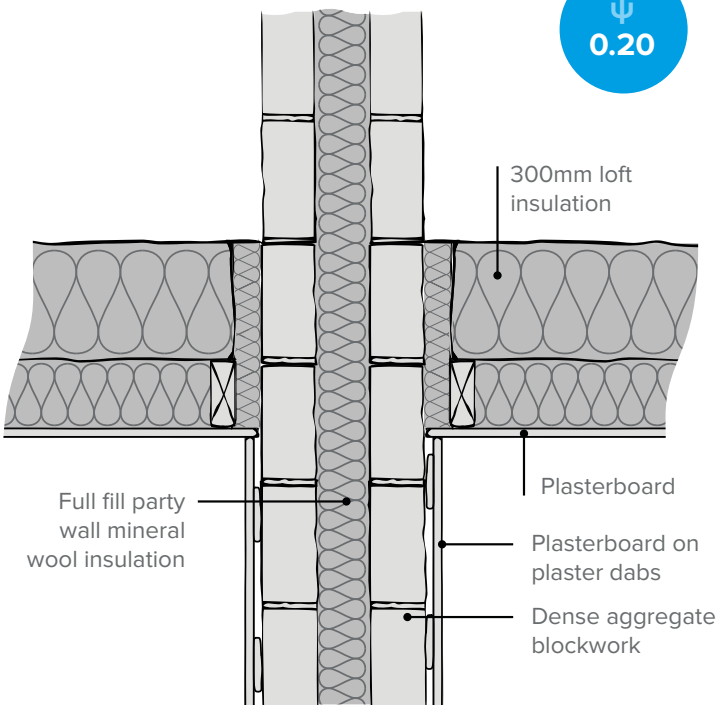

IMPROVED DETAIL

Use lightweight aggregate blockwork for the party wall leaves to improve thermal performance.

ψ 0.06

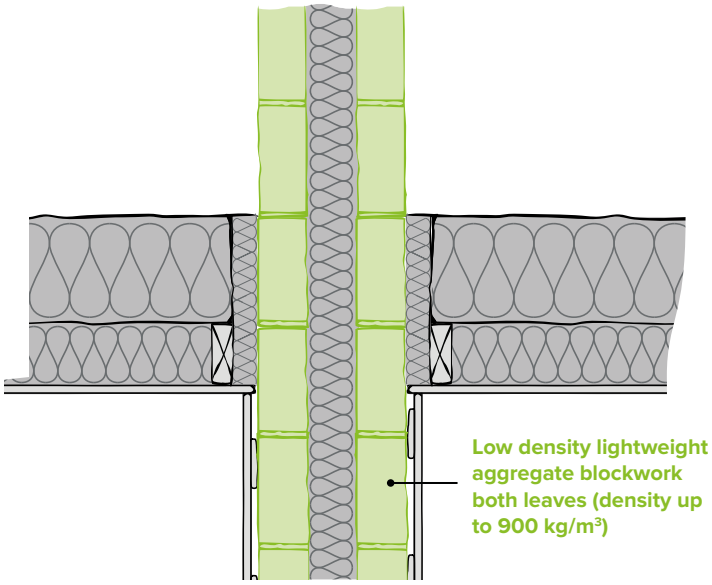

COLD ROOF
P4 PARTY WALL HEAD

BASE DETAIL

ψ 0.20

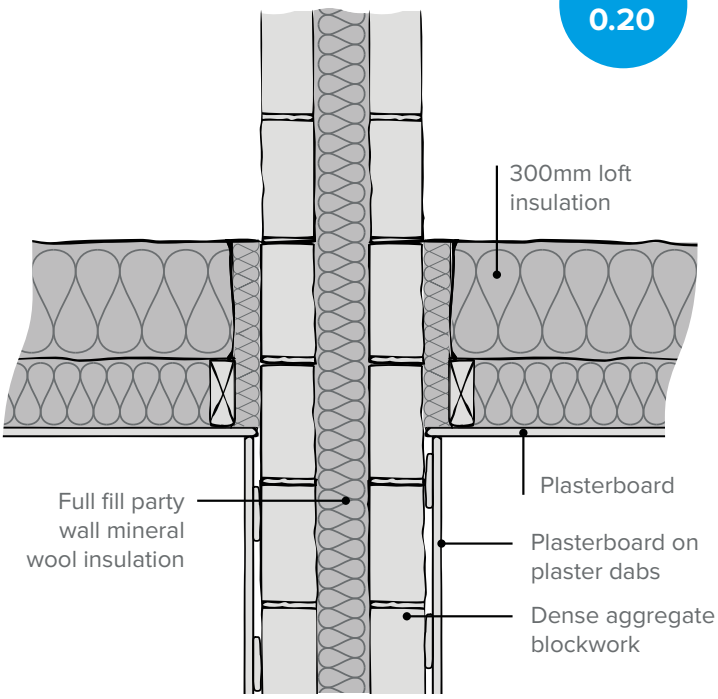

IMPROVED DETAIL

Use insulated plasterboard on party wall leaves to improve thermal performance.

ψ 0.16

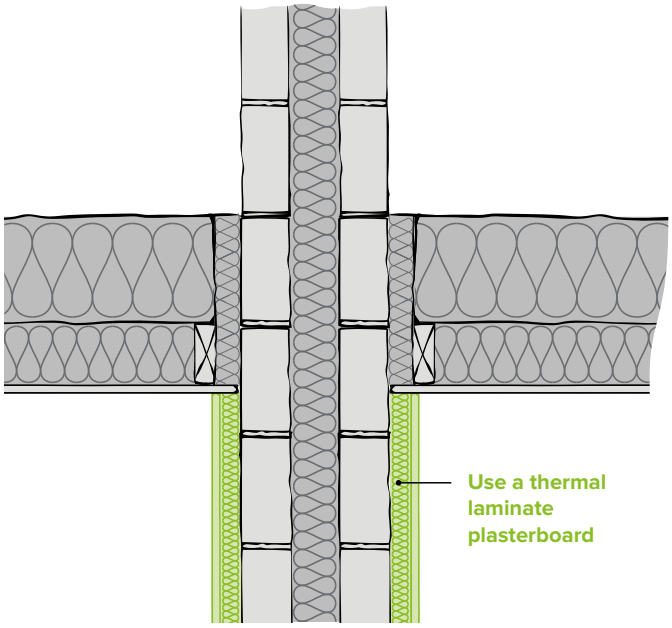

NB: The PSI-values quoted in this Guide are for indicative purposes only and should not be used in SAP calculations

PROBLEM TO AVOID

Stopping the wall cavity insulation short makes heat loss significantly worse at party walls.

ψ 0.40

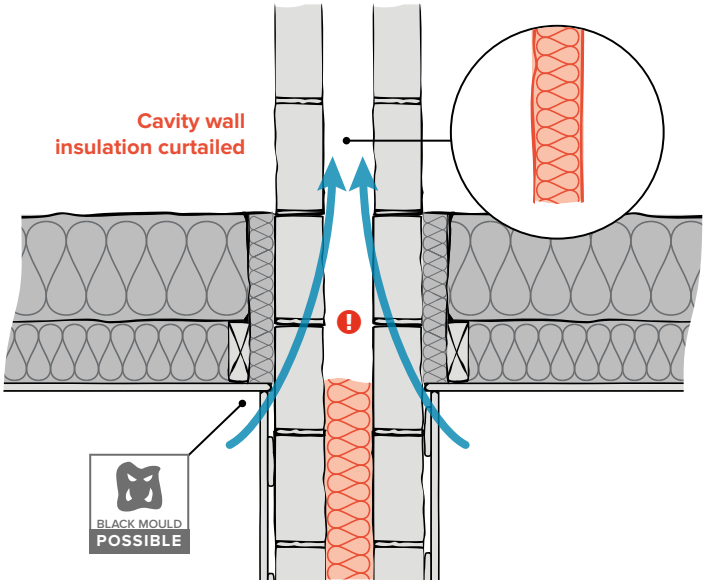

PROBLEM TO AVOID

Omitting the roof perimeter insulation between truss and wall makes heat loss significantly worse at party walls.

ψ 0.59

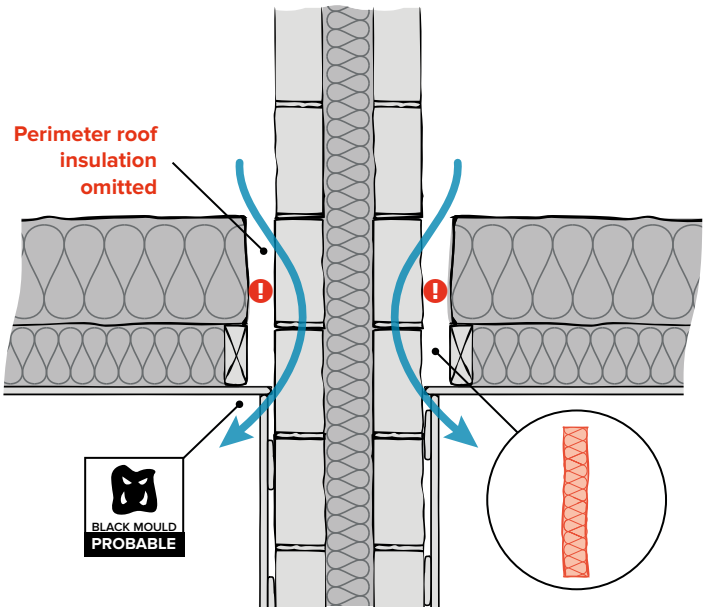

FURTHER NOTES

III

TIMBER FRAME CONSTRUCTION

KEY DESIGN RECOMMENDATIONS

	Design recommendation	No. of junctions affected	Junction references
1	Use thermal laminate plasterboard on inside of frame	5	E2, E4, E5, E6, E10 (pages 24, 26, 28, 30, 32, 34)
2	Use beam and block ground floor instead of ground bearing slab	1	E5 (pages 28, 30)
3	Use light aggregate footing blocks	2	E5, P1 (pages 28, 30)
4	Use min. 50mm floor perimeter insulation thickness	2	E5, P1 (pages 28, 30)
5	Use a window frame overlap of min. 50mm	3	E2, E3, E4 (pages 24, 26)
6	Use min. 150mm insulation behind rimboard	1	E6 (page 32)
7	Use a PU/PIR cavity closer	2	E3, E4 (pages 26)
8	Increase eaves insulation depth	1	E10 (page 34)
9	Use PU/PIR cavity lintel insulation	1	E2 (page 24)

KEY PROBLEMS TO AVOID

	Problem / site check	No. of junctions affected	Junction references	Black mould risk
1	Omitting ground floor perimeter insulation	2	E5, P1 (pages 28, 30)	
2	Omitting rafter insulation at eaves	1	E10 (page 34)	BLACK MOULD PROBABLE
3	Omitting rimboard insulation	1	E6 (page 32)	BLACK MOULD POSSIBLE
4	No window frame overlap with cavity	3	E2, E3, E4 (pages 24, 26)	
5	Omitting the cavity closure	2	E3, E4 (page 26)	BLACK MOULD PROBABLE
6	Omitting soffit insulation at eaves	1	E10 (page 34)	BLACK MOULD PROBABLE
7	No cavity lintel insulation	1	E2 (page 24)	

LINTELS
E2 TIMBER FRAME LINTEL

BASE DETAIL

ψ 0.15

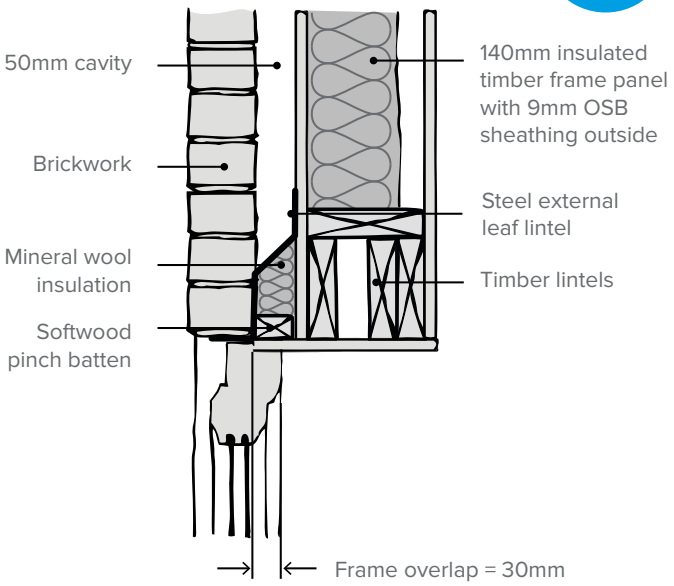

IMPROVED DETAIL

Use an insulated plasterboard reveal to improve performance of timber frame lintels.

ψ 0.10

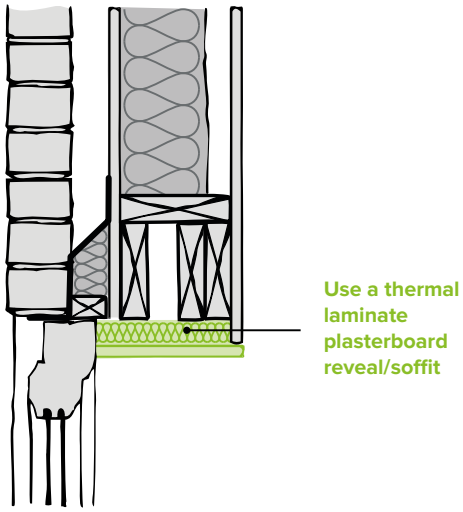

LINTELS
E2 TIMBER FRAME LINTEL

BASE DETAIL

ψ 0.15

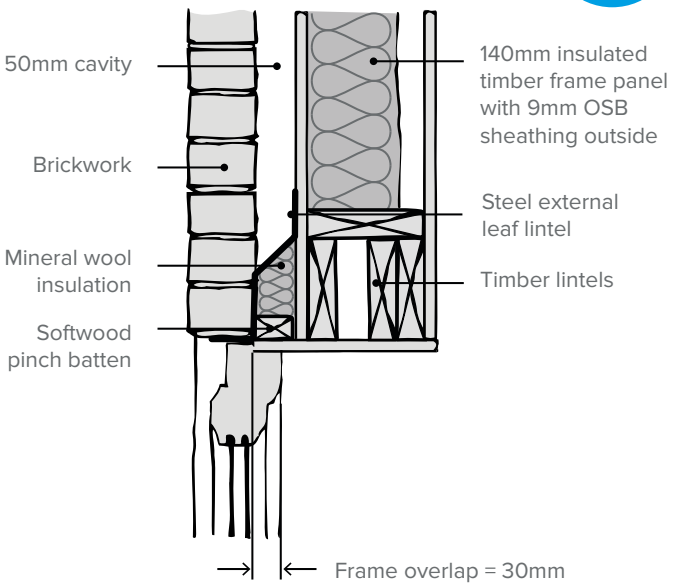

IMPROVED DETAIL

Increase the window frame overlap to improve performance of timber frame lintels.

ψ 0.13

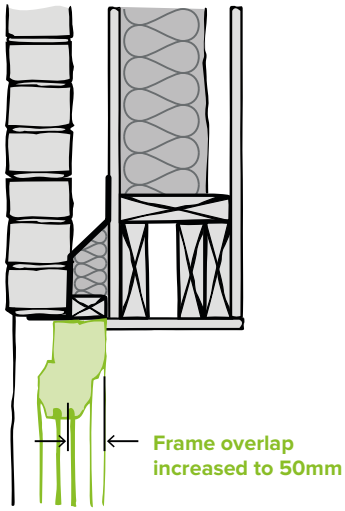

NB: The PSI-values quoted in this Guide are for indicative purposes only and should not be used in SAP calculations

PROBLEM TO AVOID

Omitting the cavity lintel insulation makes heat loss worse.

ψ 0.18

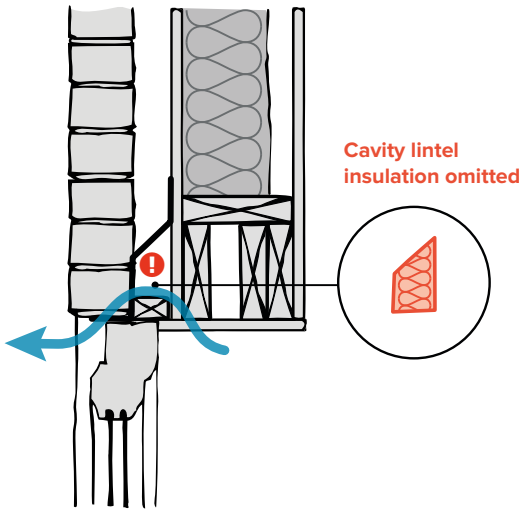

PROBLEM TO AVOID

Reducing the frame overlap to 0mm makes heat loss worse.

ψ 0.22

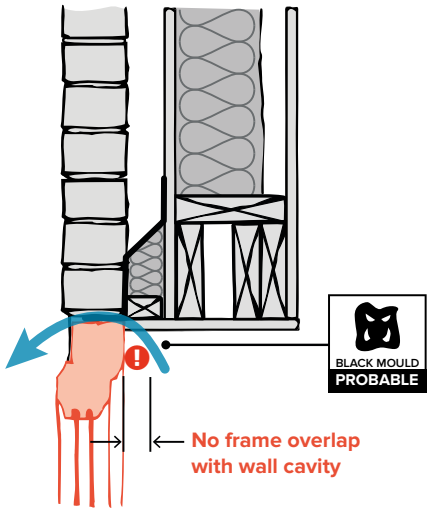

FURTHER NOTES

CAVITY LINTEL INSULATION

Upgrading the cavity lintel insulation to PU/PIR will reduce heat loss.

THERMAL LAMINATE PLASTERBOARD

Using a thermal laminate plasterboard on the external timber frame wall will reduce heat loss.

WINDOW
E3 SILL

BASE DETAIL

ψ 0.07

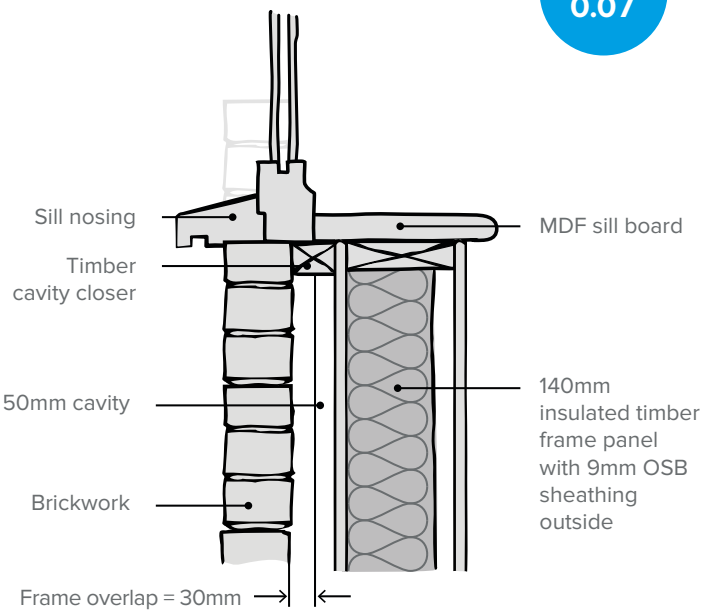

IMPROVED DETAIL

Use a cavity closer with a PU/PIR insulation core to improve performance of sills and jambs.

ψ 0.06

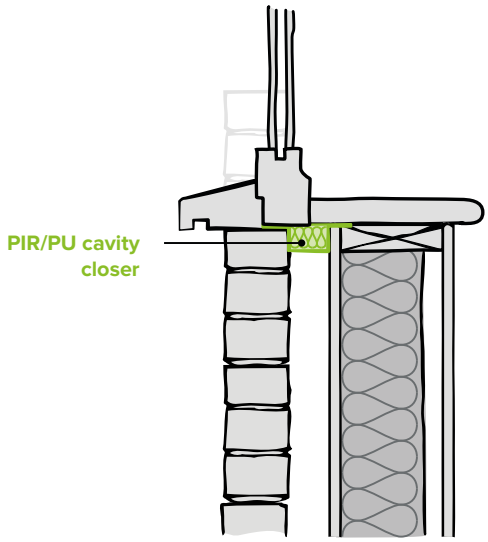

WINDOW
E4 JAMB

BASE DETAIL

ψ 0.10

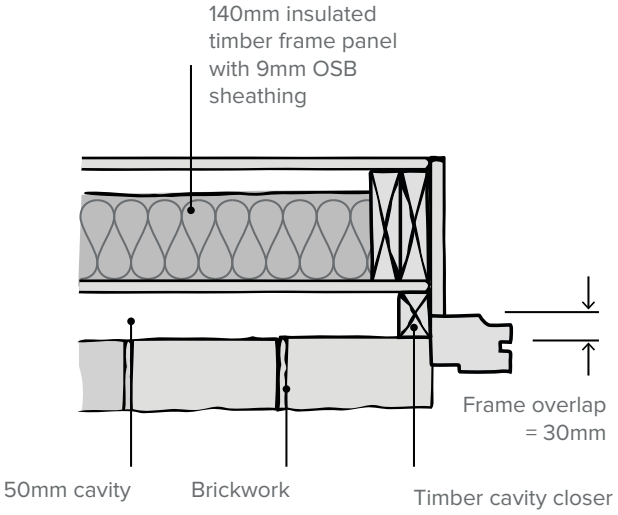

IMPROVED DETAIL

Use an insulated plasterboard reveal to improve the performance of window jambs.

ψ 0.06

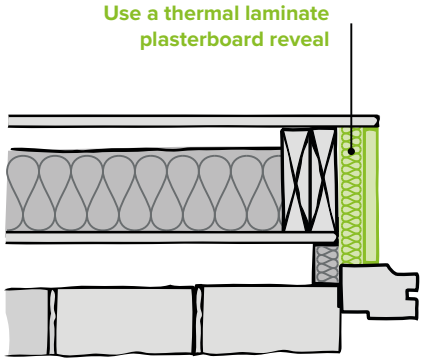

NB: The PSI-values quoted in this Guide are for indicative purposes only and should not be used in SAP calculations

✖ PROBLEM TO AVOID

Reducing the frame overlap to 0mm makes heat loss worse for sills.

ψ 0.11

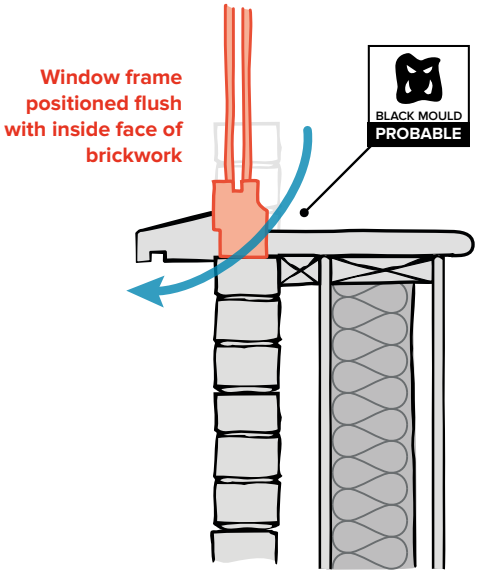

✖ PROBLEM TO AVOID

Omitting the cavity closer makes heat loss worse for sills.

ψ 0.09

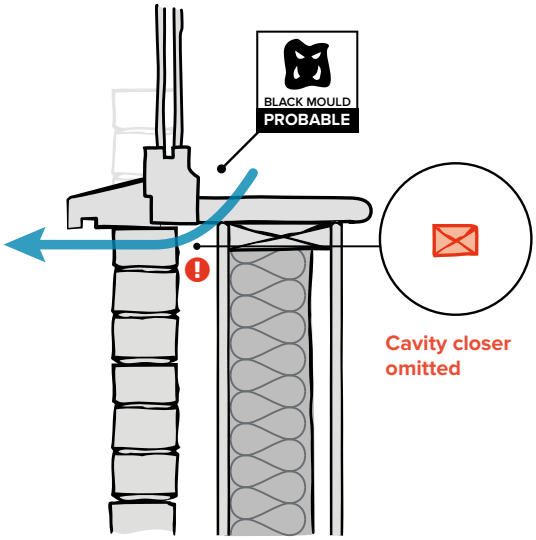

✖ PROBLEM TO AVOID

Reducing the frame overlap to 0mm makes heat loss worse for jambs.

ψ 0.15

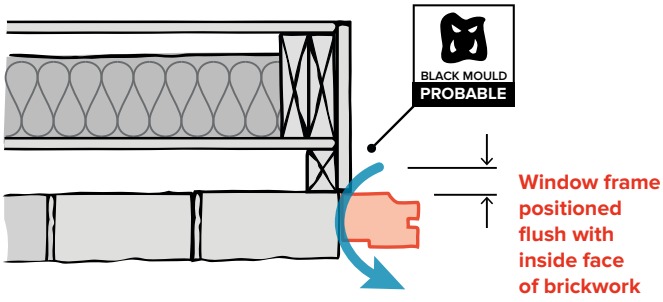

✖ PROBLEM TO AVOID

Omitting the cavity closer makes heat loss worse for jambs.

ψ 0.13

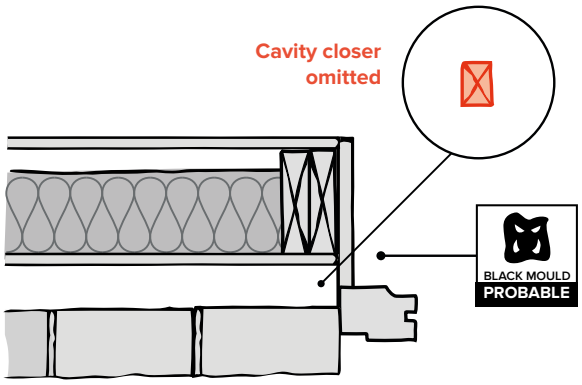

GROUND BEARING FLOOR
E5 EXTERNAL WALL

BASE DETAIL

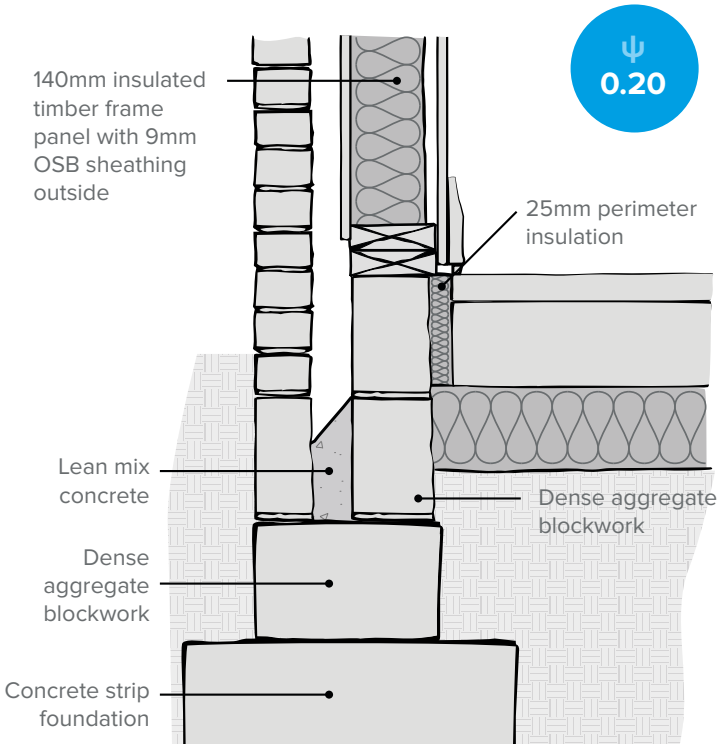

IMPROVED DETAIL

Increase the perimeter insulation thickness to improve ground floor performance.

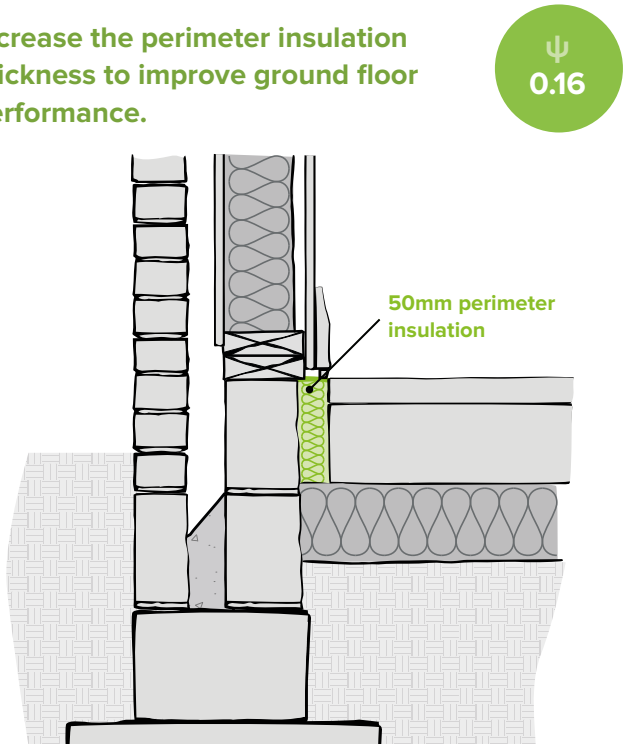

GROUND BEARING FLOOR
P1 PARTY WALL

BASE DETAIL

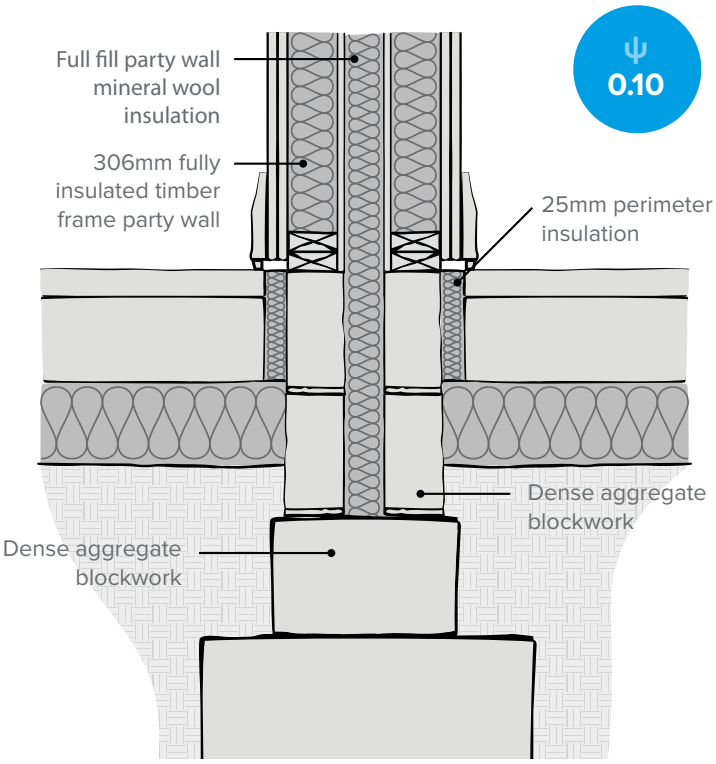

IMPROVED DETAIL

Use lightweight aggregate footing blockwork to improve ground floor performance.

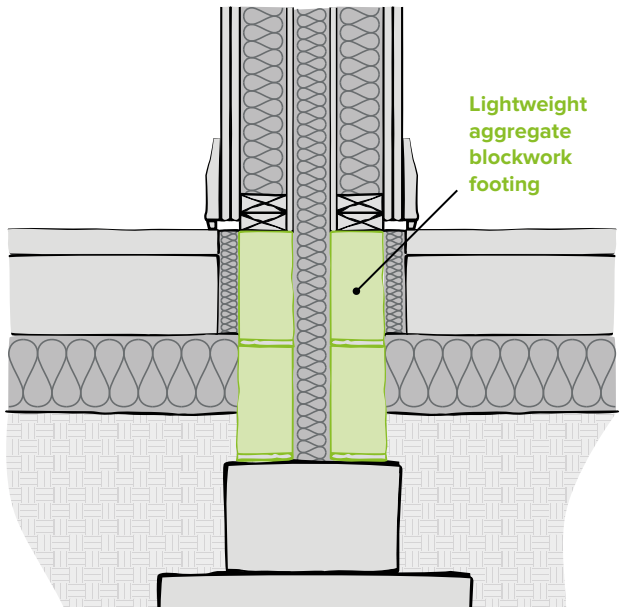

NB: The PSI-values quoted in this Guide are for indicative purposes only and should not be used in SAP calculations

PROBLEM TO AVOID

Omitting the floor perimeter insulation makes heat loss significantly worse.

ψ 0.50

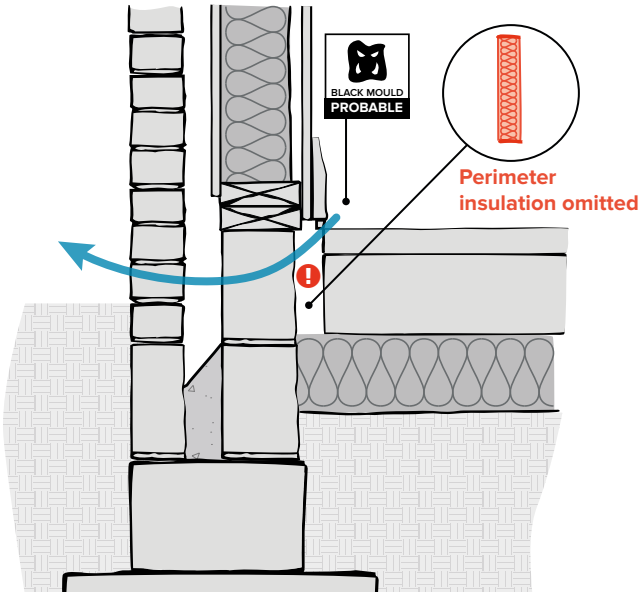

PROBLEM TO AVOID

Omitting the floor perimeter insulation makes heat loss worse.

ψ 0.16

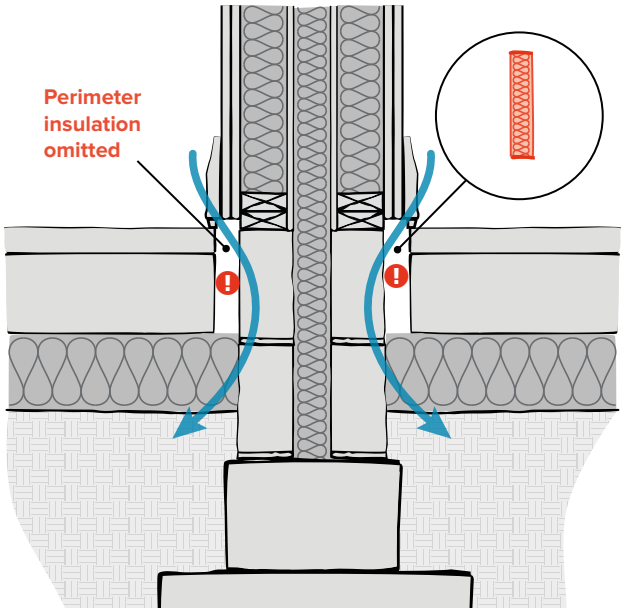

FURTHER NOTES

THERMAL LAMINATE PLASTERBOARD

Using a thermal laminate plasterboard on the timber frame wall will reduce heat loss.

BEAM AND BLOCK FLOOR
E5 EXTERNAL WALL

BASE DETAIL

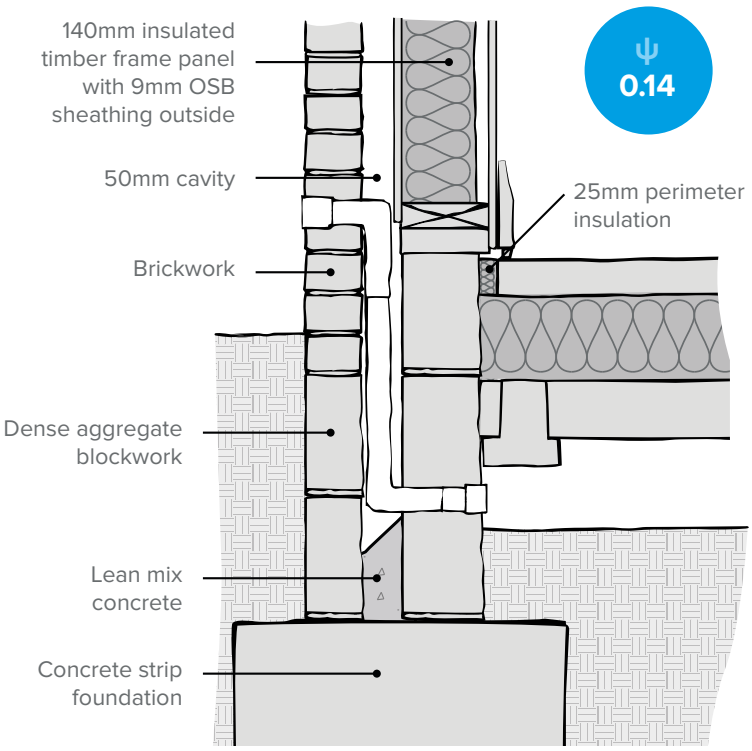

IMPROVED DETAIL

Increase the perimeter insulation thickness to improve ground floor performance.

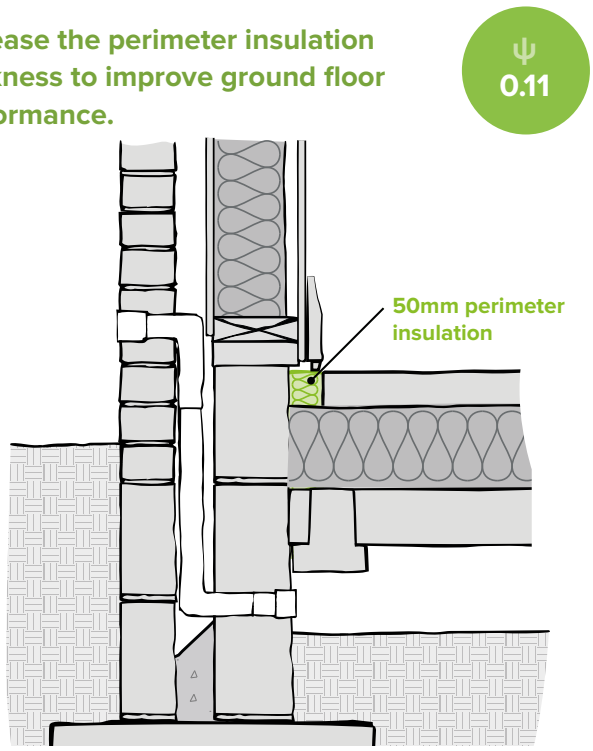

BEAM AND BLOCK FLOOR
P1 PARTY WALL

BASE DETAIL

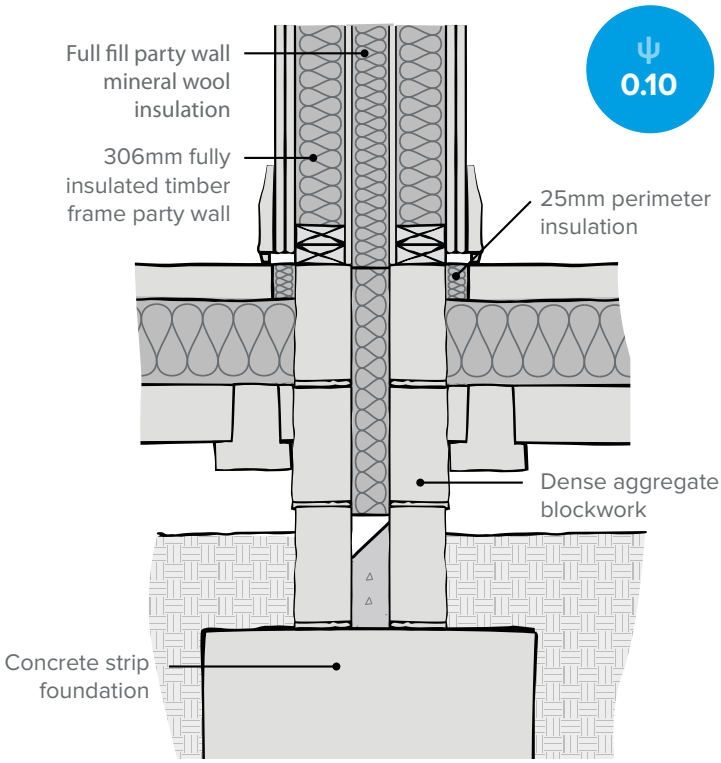

IMPROVED DETAIL

Use lightweight aggregate footing blockwork to improve ground floor performance.

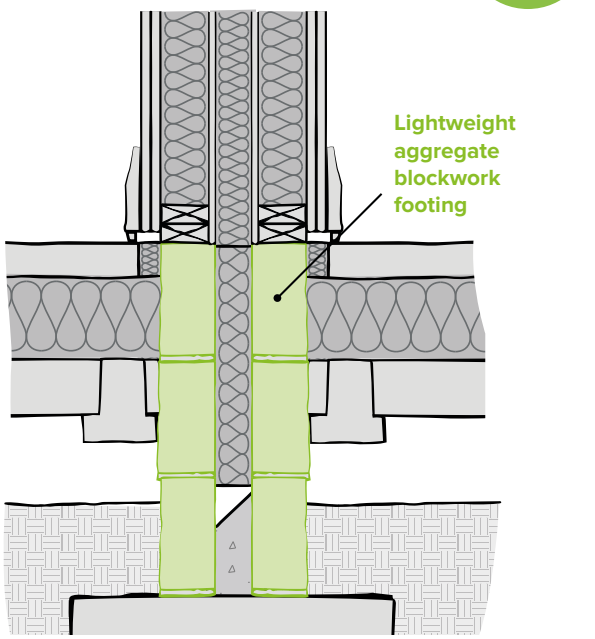

NB: The PSI-values quoted in this Guide are for indicative purposes only and should not be used in SAP calculations

PROBLEM TO AVOID

Omitting the floor perimeter insulation makes heat loss significantly worse.

ψ 0.30

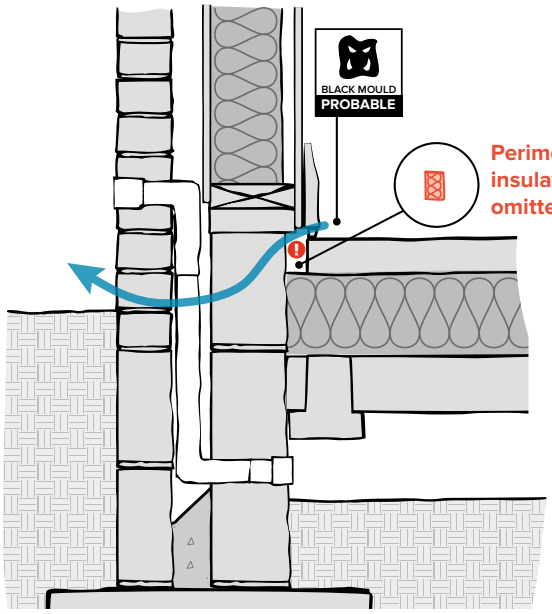

PROBLEM TO AVOID

Omitting the floor perimeter insulation makes heat loss worse.

ψ 0.18

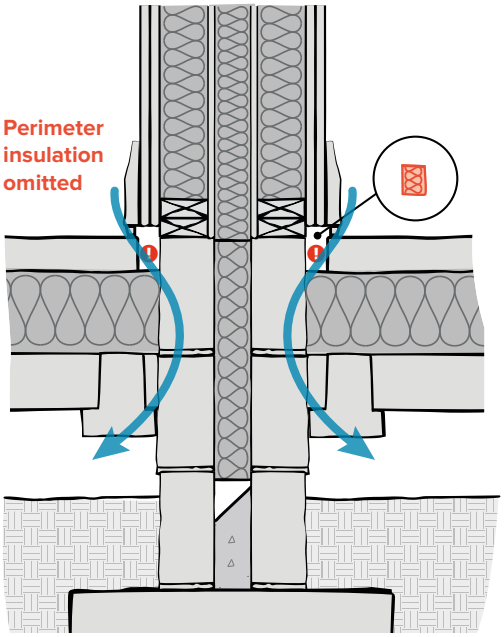

FURTHER NOTES

THERMAL LAMINATE PLASTERBOARD

Using a thermal laminate plasterboard on the timber frame wall will reduce heat loss.

TIMBER FLOOR
E6 INTERMEDIATE FLOOR

BASE DETAIL

ψ 0.11

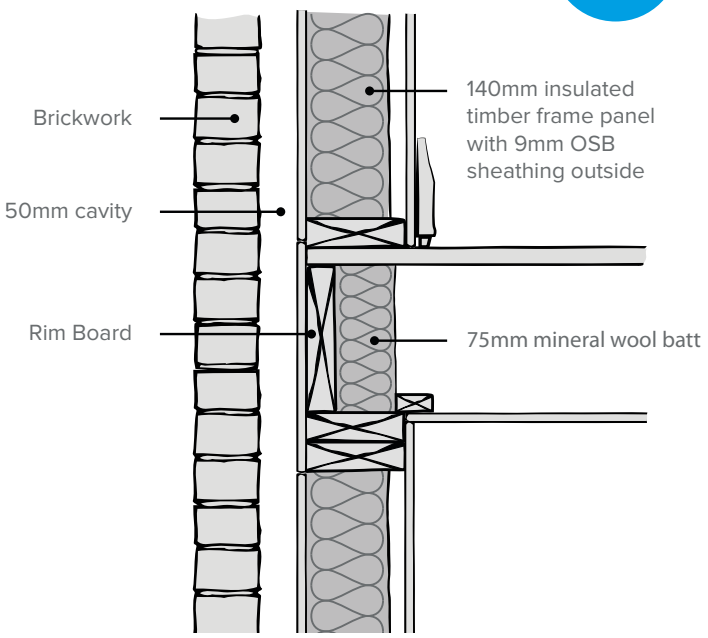

IMPROVED DETAIL

Increase the rimboard insulation thickness to improve intermediate floor performance.

ψ 0.08

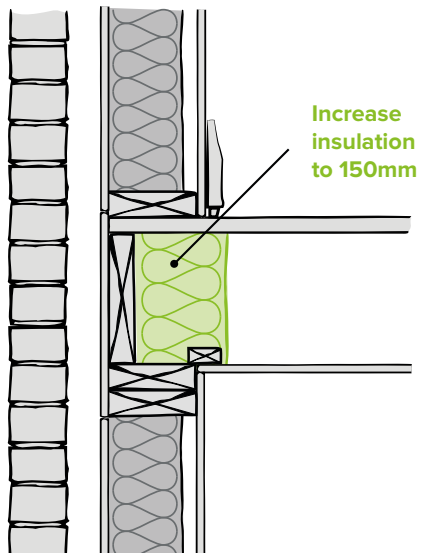

TIMBER FLOOR
E6 INTERMEDIATE FLOOR

BASE DETAIL

ψ 0.11

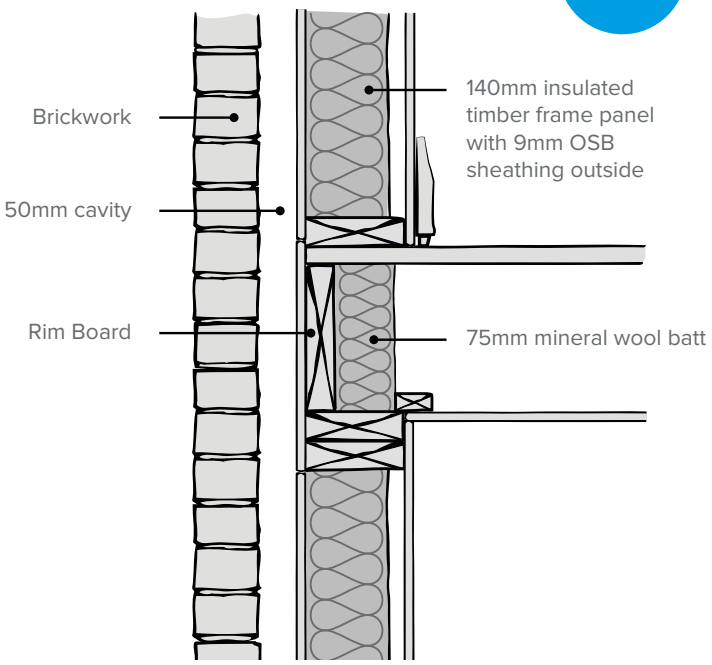

IMPROVED DETAIL

Use an insulated plasterboard on the inside of the frame to improve intermediate floor performance.

ψ 0.09

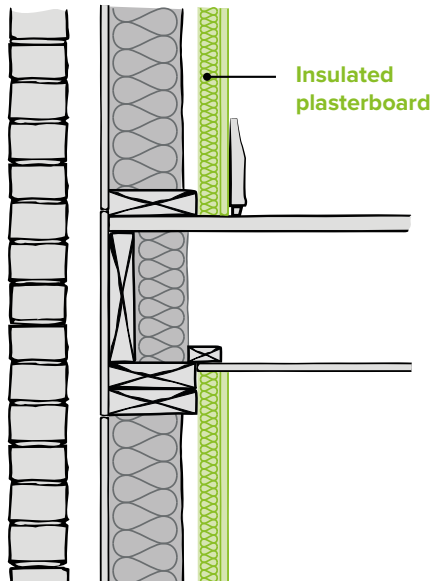

NB: The PSI-values quoted in this Guide are for indicative purposes only and should not be used in SAP calculations

PROBLEM TO AVOID

Omitting the rimboard insulation makes heat loss significantly worse at intermediate floors.

ψ
0.26

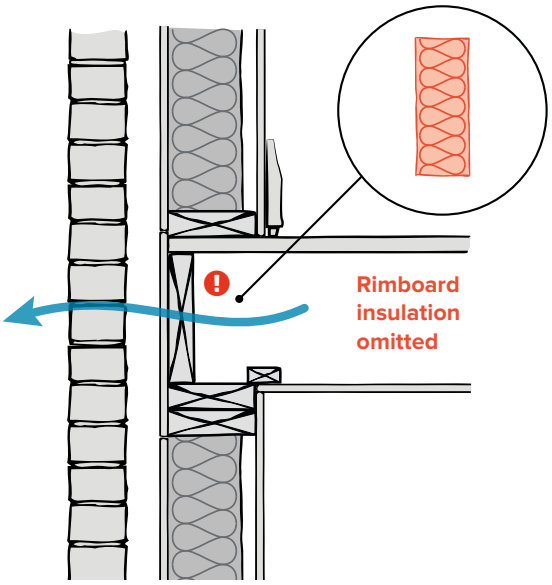

FURTHER NOTES

COLD ROOF
E10 EAVES

BASE DETAIL

ψ 0.04

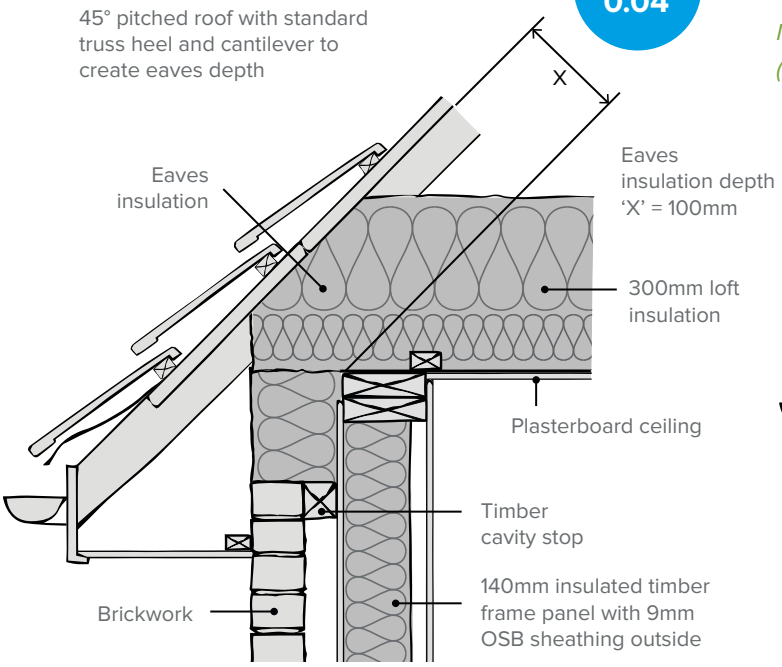

IMPROVED DETAIL

ψ 0.03

Increase the eaves insulation depth 'X' to improve performance.

Note – this may influence the truss design (see further notes)

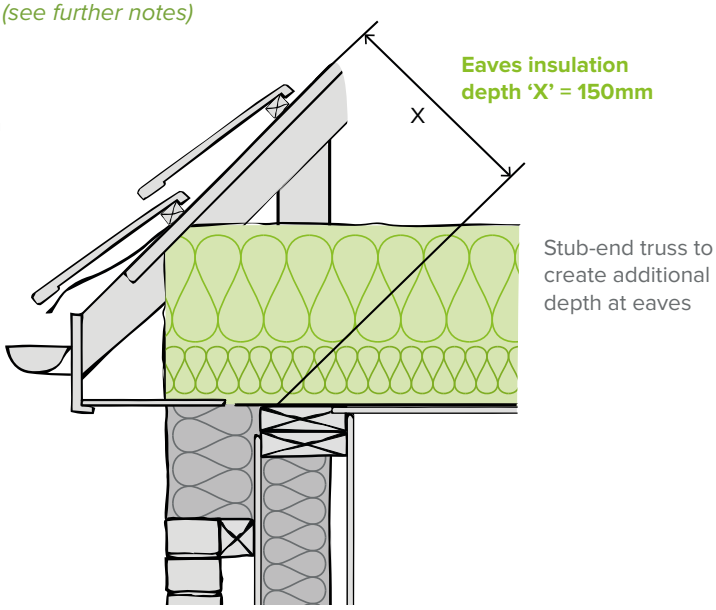

COLD ROOF
E10 EAVES

BASE DETAIL

ψ 0.04

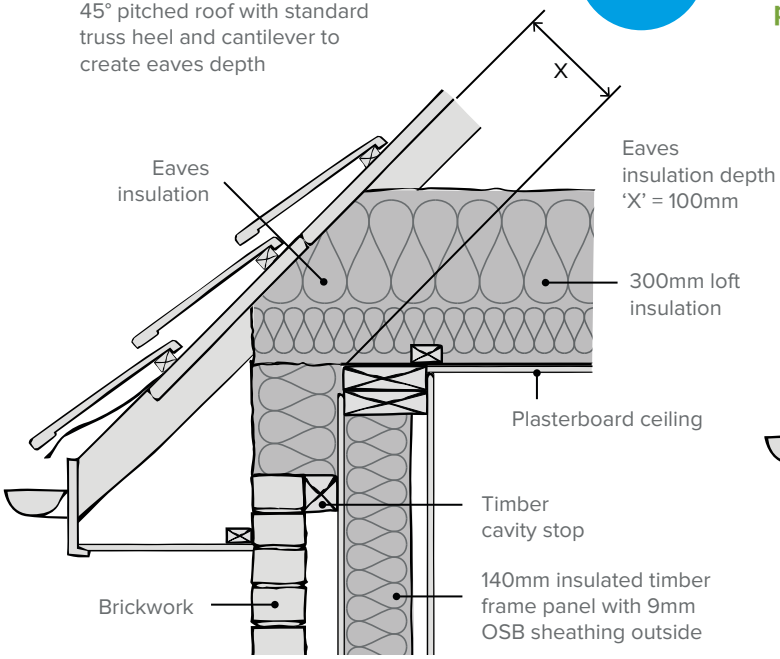

IMPROVED DETAIL

ψ 0.03

Use insulated plasterboard on the inside of the frame to improve eaves performance.

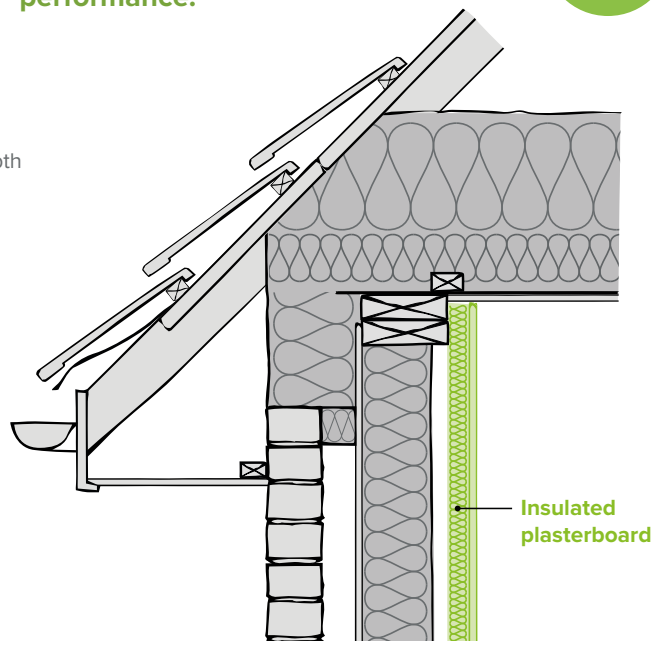

NB: The PSI-values quoted in this Guide are for indicative purposes only and should not be used in SAP calculations

PROBLEM TO AVOID

Omitting roof insulation at eaves makes heat loss significantly worse.

ψ 0.21

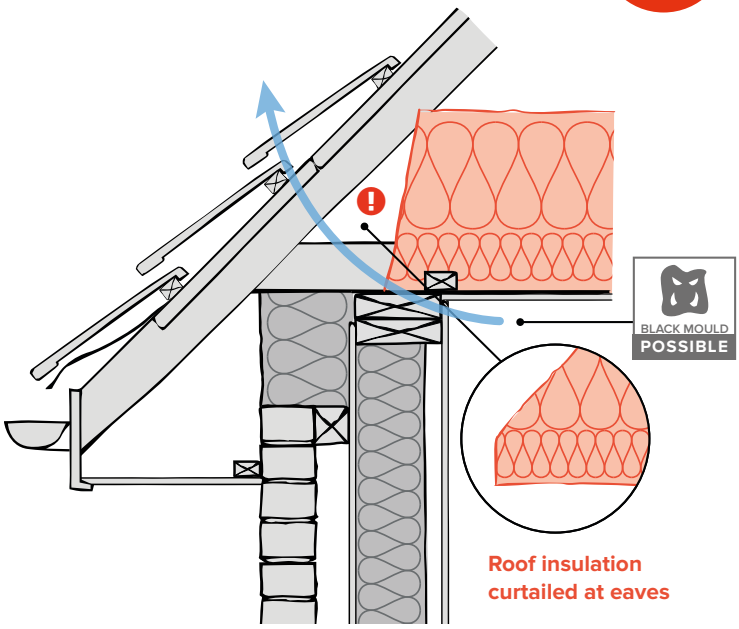

PROBLEM TO AVOID

Omitting soffit insulation makes heat loss worse at eaves.

ψ 0.09

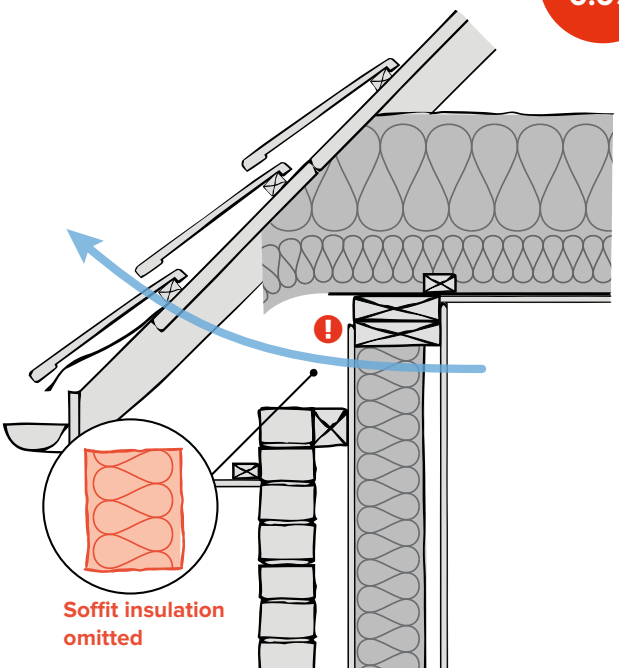

FURTHER NOTES

ADVISE TRUSS DESIGNERS OF INSULATION SPACE REQUIREMENTS

Specifying the desired roof pitch (p°), eaves overhang (a) and eaves insulation depth (b) will enable the truss designer to select the most appropriate truss heel detail to meet these requirements.

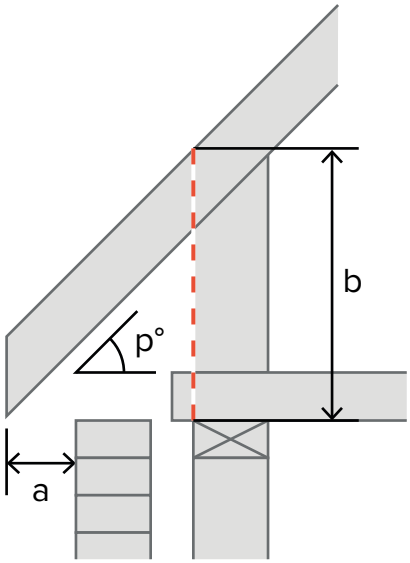

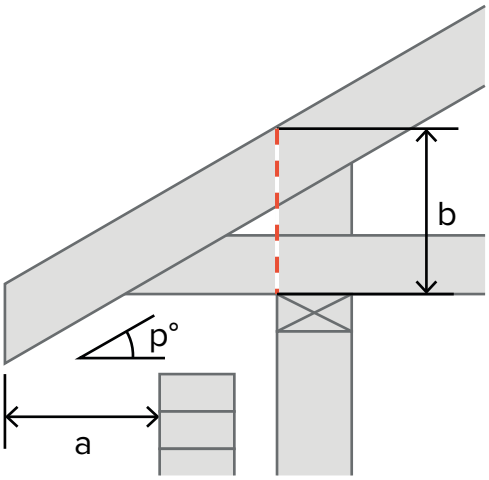

NOTES

NOTE: This Guide is not a legal document and does not form part of a Building Regulations approved specification. It is for information and good practice purposes only. Consult your Building Control Officer for details on approved specification's and policy.

Published February 2016, version 1.1

Zero Carbon Hub
Layden House
76-86 Turnmill Street
London EC1M 5LG

T. 0845 888 7620
E. info@zerocarbonhub.org
www.zerocarbonhub.org